Jackson®

Warewashing Systems

INSTALLATION, OPERATION, AND SERVICE MANUAL

DYNASTAR®

DYNASTAR SERIES DOOR-TYPE DISHMACHINES

DynaStar Manual • 07610-004-66-53-G

MANUFACTURER'S LIMITED WARRANTY
(APPLICABLE ONLY IN THE UNITED STATES AND CANADA)

WARRANTY REGISTRATION:

To register your Jackson Dishmachine's warranty go to **jacksonwws.com/warranty** or call 1-888-800-5672. Failure to register the Dishmachine will void the warranty.

ONE YEAR LIMITED PARTS AND LABOR WARRANTY

For a period of one (1) year from date of original installation of a new Jackson Dishmachine (but in no event to exceed eighteen (18) months from date of shipment from Jackson's factory), Jackson WWS, Inc. (Jackson) will repair or replace, at its discretion, any original part that proves defective in materials or workmanship at the time the Dishmachine was purchased; provided that (i) the Dishmachine has not been altered, (ii) the Dishmachine has been properly installed, maintained, and operated under normal use conditions and in accordance with the applicable installation, operation and service manual available on the Jackson website, and (iii) a warranty claim is reported to a Jackson Authorized Service Agency within the warranty period. This warranty includes replacement with Jackson specified genuine replacement parts, purchased directly from a Jackson Authorized Parts Distributor or Service Agency. Use of generic replacement parts may create a hazard and shall void this warranty.

THIS WARRANTY DOES NOT APPLY OUTSIDE THE UNITED STATES AND CANADA.

Jackson will pay the labor to repair or replace a defective original part as a part of the warranty, provided that a Jackson Authorized Service Agency performs the labor. Any repair or replacement work by anyone other than a Jackson Authorized Service Agency is the sole responsibility of the purchaser. Labor coverage is limited to regular hourly rates; Jackson will not pay overtime premiums or emergency service charges.
Accessory components (such as table limit switches, pressure regulators, and drain water tempering kits) that are not installed by Jackson at the factory and are shipped with the Dishmachine carry only a (1) one-year parts warranty. Labor to repair or replace these components is not included in the warranty or covered by Jackson. Booster heaters not manufactured by Jackson are not covered by this warranty but are warranted by their respective manufacturers.
This warranty is void if any defect or failure is a direct result from shipping, handling, fire, water, accident, alteration, modification, misuse, abuse, flood, acts of God, burglary, casualty, attempted repair by unauthorized persons, use of replacement parts not authorized by Jackson, improper installation, installation not in accordance with local electrical and plumbing codes, if the serial number has been removed or altered, if the Dishmachine is used for any purpose other than originally intended, or if the equipment is installed for residential use.
Jackson does not authorize any other entity or person, including, without limitation, any entity or person who deals in Jackson Dishmachines, to change this warranty or create any other obligation in connection with Jackson Dishmachines.

TRAVEL LIMITATIONS:

Jackson limits warranty travel time to the customer site within 50 miles of the Jackson authorized service agent's office and during regular business hours. Jackson will not pay for travel time and mileage that exceeds these limits, or any fees such as those for air or boat travel without prior authorization.

REPLACEMENT PARTS WARRANTY:

For a period of (90) ninety days from the date of installation by a Jackson Authorized Service Agency (but in no event to exceed (180) one-hundred-eighty days from the date of purchase from a Jackson Authorized Parts Distributor or Service Agency), Jackson will repair or replace, at its discretion, any Jackson genuine replacement parts that prove defective in materials or workmanship at the time the replacement parts were installed. This warranty does not include paying the labor to repair or replace the replacement part. This warranty is subject to all conditions, exclusions and limitations applicable to the Dishmachine.

MANUFACTURER'S LIMITED WARRANTY (CONT.)
(APPLICABLE ONLY IN THE UNITED STATES AND CANADA)

PRODUCT CHANGES:

Jackson reserves the right to make changes in design and specification of any component of the Dishmachine as engineering or necessity requires.

DISCLAIMER OF WARRANTIES:

THERE ARE NO WARRANTIES, EXPRESSED OR IMPLIED, INCLUDING, WITHOUT LIMITATION, ANY IMPLIED WARRANTY OF FITNESS FOR A PARTICULAR PURPOSE OR MERCHANTABILITY, THAT ARE NOT SET FORTH HEREIN, OR THAT EXTEND BEYOND THE DURATION HEREOF.

LIMITATION OF REMEDIES AND LIABILITIES:

YOUR SOLE AND EXCLUSIVE REMEDY UNDER THIS LIMITED WARRANTY SHALL BE PRODUCT REPAIR OR REPLACEMENT AS PROVIDED HEREIN.

UNDER NO CIRCUMSTANCES WILL JACKSON BE LIABLE FOR ANY INCIDENTAL OR CONSEQUENTIAL DAMAGES, OR FOR DAMAGES IN THE NATURE OF PENALTIES. JACKSON'S LIABILITY ON ANY CLAIM OF ANY KIND WITH RESPECT TO THE GOODS OR SERVICES COVERED HEREUNDER SHALL IN NO CASE EXCEED THE PRICE OF THE GOODS OR SERVICES OR PART THEREOF WHICH GIVES RISE TO THE CLAIM.

ITEMS NOT COVERED:

THIS WARRANTY DOES NOT COVER (1) ADJUSTMENTS INCLUDING, BUT NOT LIMITED TO, TIMER CAMS, THERMOSTATS, DOORS, TANK HEATER ADJUSTMENTS OR CLUTCHES; (2) AIR FREIGHT OR OVERNIGHT FREIGHT; (3) ANY AMOUNT EXCEEDING ORIGINAL PURCHASE PRICE; (4) CLEANING OF DRAIN VALVES, GAS LINES, RINSE/WASH NOZZLES, STRAINERS, SCREENS, OR SPRAY PIPES; (5) CLEANING OR DELIMING OF THE DISHMACHINE OR ANY COMPONENT INCLUDING, BUT NOT LIMITED TO, WASH ARMS, RINSE ARMS AND STRAINERS; (6) CONDITIONS CAUSED BY THE USE OF INCORRECT (NON-COMMERCIAL) GRADE DETERGENTS; (7) CORROSION FROM CHEMICALS DISPENSED IN EXCESS OF RECOMMENDED CONCENTRATIONS; (8) COSMETIC DAMAGE, INCLUDING BUT NOT LIMITED TO, SCRATCHES, DENTS, CHIPS, AND OTHER DAMAGE TO THE DISHMACHINE FINISHES, UNLESS SUCH DAMAGE RESULTS FROM DEFECTS IN MATERIALS AND WORKMANSHIP AND IS REPORTED TO JACKSON WITHIN (30) THIRTY DAYS FROM THE DATE OF INSTALLATION; (9) DAMAGE CAUSED BY LABOR DISPUTE; (10) DAMAGES RESULTING FROM IMPROPER CONNECTION TO UTILITY SERVICE; (11) DAMAGES RESULTING FROM WATER CONDITIONS, INADEQUATE OR EXCESSIVE WATER PRESSURE, ACCIDENTS, ALTERATIONS, IMPROPER USE, ABUSE, HANDLING, OVERLOADS, TAMPERING, IMPROPER INSTALLATION OR FAILURE TO FOLLOW MAINTENANCE AND OPERATING PROCEDURES; (12) DISCOLORATION, RUST OR OXIDATION OF SURFACES RESULTING FROM CAUSTIC OR CORROSIVE ENVIRONMENTS, INCLUDING, BUT NOT LIMITED TO, HIGH SALT CONCENTRATIONS, HIGH MOISTURE OR HUMIDITY, OR EXPOSURE TO CHEMICALS; (13) ELECTRIC BOOSTERS, FEED LINES, FLEX HOSE, FUSES, GARBAGE DISPOSALS, OR GAS PILOTS; (14) EXCESSIVE LIME, MINERAL, OR ALKALINE BUILDUP; (15) EXPENSES DUE TO DISCONNECTION, DELIVERY, RETURN AND REINSTALLATION; (16) FAILURE OF ELECTRICAL COMPONENTS DUE TO CONNECTION OF CHEMICAL DISPENSING EQUIPMENT INSTALLED BY OTHERS; (17) FAILURE OF FACILITY WATER HEATER TO MAKE TEMPERATURE; (18) FAILURE TO MAINTAIN WATER HARDNESS LOWER THAN 3.0 GRAINS, PH BETWEEN 7.0 AND 8.5 AND TOTAL DISSOLVED SOLIDS BELOW 250 PPM; (19) FAILURE TO COMPLY WITH LOCAL ELECTRICAL BUILDING CODES; (20) LEAKS OR DAMAGE RESULTING FROM SUCH LEAKS CAUSED BY THE INSTALLER, INCLUDING THOSE AT MACHINE TABLE CONNECTIONS, OR BY CONNECTION OF CHEMICAL DISPENSING EQUIPMENT INSTALLED BY OTHERS; (21) OPENING OR CLOSING OF UTILITY SUPPLY VALVES OR SWITCHING OF ELECTRICAL SUPPLY CURRENT; (22) PERFORMANCE OF REGULAR MAINTENANCE AND CLEANING AS OUTLINED IN THE OPERATOR'S GUIDE; (23) REMOVAL OR REINSTALLATION OF INACCESSIBLE DISHMACHINES OR BUILT-IN FIXTURES THAT INTERFERE WITH SERVICING, REMOVAL OR REPLACEMENT OF THE DISHMACHINE; (24) REPLACEMENT WEAR ITEMS INCLUDING, BUT NOT LIMITED TO, CURTAINS, DRAIN BALLS, DOOR GUIDES, GASKETS, O-RINGS, SEALS, SQUEEZE TUBES, AND BEARINGS; (25) RESIDENTIAL USE; (26) USE WITH UTILITY SERVICE OTHER THAN THAT DESIGNATED ON THE RATING PLATE.

REVISION HISTORY

Revision	Date	Made by	Process	Details
A	4-9-19	JH	8681	Initial release of the manual.
B	11-26-19	JH	8693 8700	Added 460 V, NB, and VER models. Added flow pressure range for pumped rinse model. Revised F6 in Fault Codes section. Changed table turndown to 1" ± 1/4". Updated schematics.
C	10-27-20	JH	8720 8724	Updated VER system. Added 12 kW rinse heater. Removed Exhaust Fan Timer section. Revised flow pressure range for pumped rinse model. Updated Control Box section. Added F12 in Fault Codes section. Updated P/N of item #19 on pgs. 42 and 46. Updated schematics.
D	1-12-21	JH	N/A	Added instructions for selecting Turbo rinse option. Revised Deliming instructions. Updated schematics.
E	1-19-22	JH	8718	Added HH-E models to the manual.
F	4-29-22	JH	22-1085 22-1107	Added Smart Vent section. Switched program numbers for DynaStar and VER on pg. 22. Added Incoming Water Temperature Check and Firmware Version Check to Programming section. Added F18, F19, and F20 fault codes. Changed I/O module P/N. Added wash arm end-cap o-ring.
G	7-28-23	JH	23-1952	Added links in Control Panel sections to earlier manual with P/Ns of I/O modules for machines before 22D405278. Updated plumbing sections. Added P/N for manifold bracket on HH-E plumbing. Added panels for HH-E. Added rear rack guide. Corrected VER coil P/N. Updated schematics.

Jackson®
Warewashing Systems

DynaStar®
Door-type machine; electrically-heated, high-temp, hot-water sanitizing, with booster heater.

DynaStar® NB
Door-type machine; electrically-heated, high-temp, hot-water sanitizing, without booster heater.

DynaStar® VER
Door-type machine; electrically-heated, high-temp, hot-water sanitizing, with booster heater and VER heat recovery system.

DynaStar® HH-E
High-hood door-type machine; electrically-heated, high-temp, hot-water sanitizing, with booster heater.

DynaStar® HH-E NB
High-hood door-type machine; electrically-heated, high-temp, hot-water sanitizing, without booster heater.

DynaStar® HH-E VER
High-hood door-type machine; electrically-heated, high-temp, hot-water sanitizing, with booster heater and VER heat recovery system.

The manufacturer provides technical support for all of the machines detailed in this manual. We strongly recommend that you refer to this manual before making a call to our technical support staff. Please have this manual open when you call so that our staff can refer you, if necessary, to the proper page.
Technical support is not available on holidays.

Contact technical support toll free at 1-888-800-5672.

Technical support is available for service personnel only.

TABLE OF CONTENTS

GUIDES

Symbols 1
Abbreviations & Acronyms 1

SPECIFICATIONS

Machine Dimensions 2
Table Dimensions 6
Operating Capacities 7
Electrical Requirements 8

INSTALLATION

Installation Instructions 9
Inspection *9*
Unpacking *9*
Leveling *9*
Plumbing *9*
Drain Line Connection *9*
Water Supply Connection *10*
Plumbing Check *10*
Chemical Connections *11*
Electrical Power Connections *12*
Motor Rotation *12*
Voltage Check *13*
Surrounding Area *13*
Temperature Setpoints *13*
Smart Vent (VER Models) *13*

OPERATION

Operating Instructions 14
Preparation *14*
Power Up *14*
Filling the Wash Tub *14*
Ware Preparation *15*
Daily Machine Preparation *15*
Washing a Rack of Ware *15*
Turbo Rinse *16*
Shutdown & Cleaning *16*
Detergent Control *18*
Deliming *19*
Display Instructions *20*

MAINTENANCE

Preventative Maintenance 21
PSI Check 21

TABLE OF CONTENTS

TROUBLESHOOTING

Programming 22
Fault Codes 25
Troubleshooting 28

PARTS

Control Panel, 208-230 V 30
Control Panel, 460 V 32
DynaStar Hood 34
HH-E Hood 36
DynaStar Cantilever Arm 38
HH-E Cantilever Arm 40
DynaStar Tub 42
HH-E Tub 44
DynaStar Rack Rail 46
HH-E Rack Rail 47
Frame 48
DynaStar Wash & Rinse Arms 50
HH-E Wash & Rinse Arms 52
DynaStar Rinse Tank 54
HH-E Rinse Tank 55
Heaters 56
Motors 57
DynaStar Plumbing 59
HH-E Plumbing 61
DynaStar NB Plumbing 63
HH-E NB Plumbing 65
DynaStar VER Plumbing 67
HH-E VER Plumbing 69
VER System 71
Door Interlock 72
Plumbing Options 74

SCHEMATICS

208/230 V, 50/60 HZ, 1/3 Phase 75
460 V, 50/60 HZ, 3 Phase 76

ADDENDUM

Display Guide 77

SYMBOLS

- Risk of Injury to Personnel

- Risk of Damage to Equipment

- Risk of Electrical Shock

- Caustic Chemicals

- Reference Data Plate

- Lockout Electrical Power

NOTICE - Important Note

- Instructions Hyperlink

ABBREVIATIONS & ACRONYMS

ANSI - American National Standards Institute
Btu/Hr - British Thermal Units per Hour
CFM - Cubic Feet per Minute
GHT - Garden Hose Thread
GPH - Gallons per Hour
GPM - Gallons per Minute
GPG - Grains per Gallon
HP - Horsepower
Hz - Hertz
ID - Inside Diameter
kW - Kilowatts
LLC - Liquid Level Controller
MCA - Minimum Circuit Ampacity
MIN - Minimum
MOP - Maximum Overcurrent Protection
NFPA - National Fire Protection Association
NPT - National Pipe Thread
OD - Outside Diameter
PRV - Pressure Regulating Valve
PSI - Pounds per Square Inch
V - Volts

DYNASTAR/NB DIMENSIONS

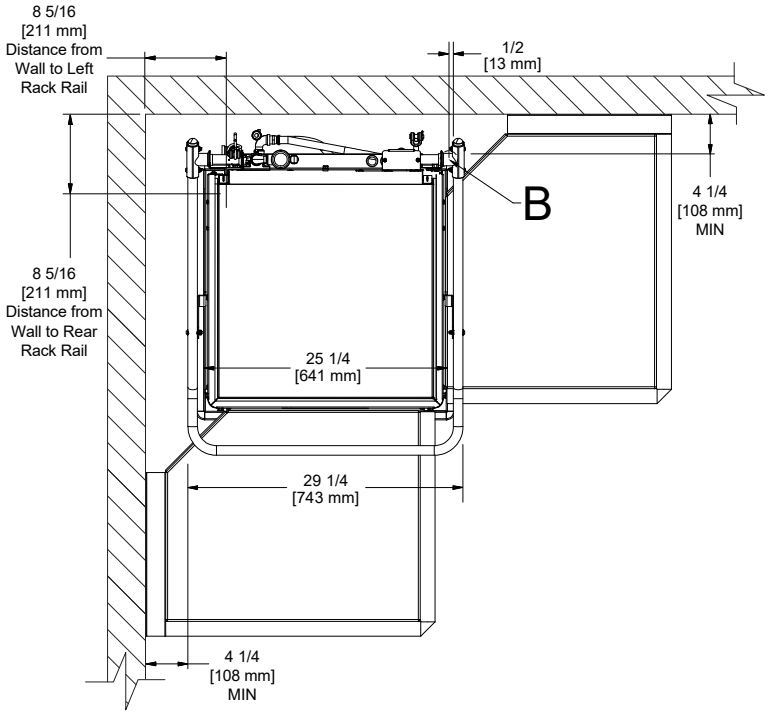

LEGEND

A - Drain Connection (1 1/2” NPT)

B - Water Inlet (1/2” male NPT)
(Connect to true 1/2" ID line or larger)

C - Electrical Connection

D - Detergent Connection

E - Rinse-aid Connection

All dimensions from floor can be increased 1 1/8” using the machine’s adjustable feet.

Dish tables are stationary, so the machine must be moved until rack rails line-up properly. As a result, distances from wall to rack rails might vary.

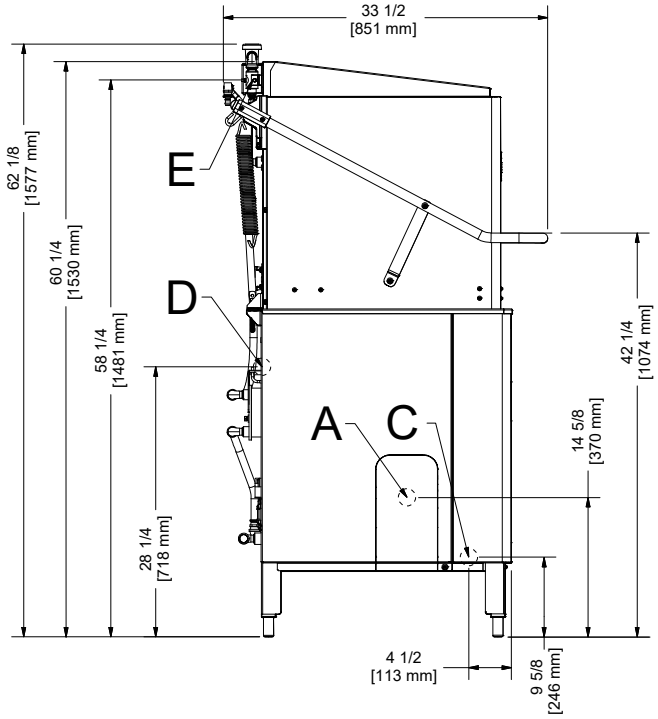

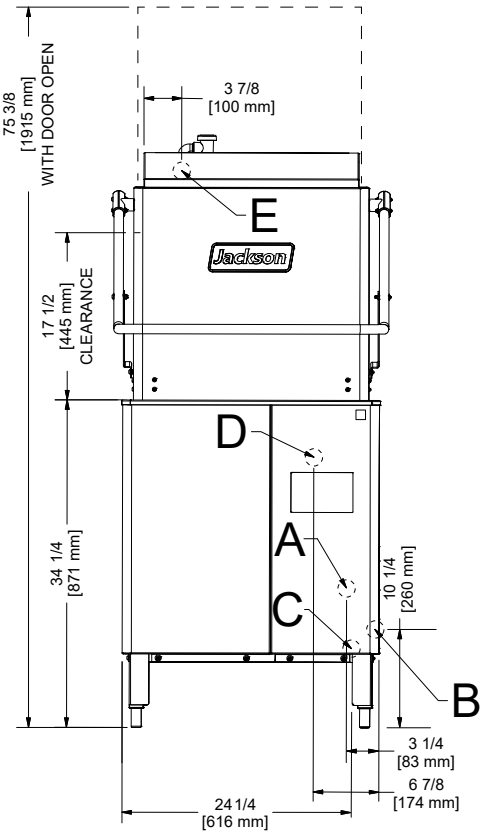

DYNASTAR VER DIMENSIONS

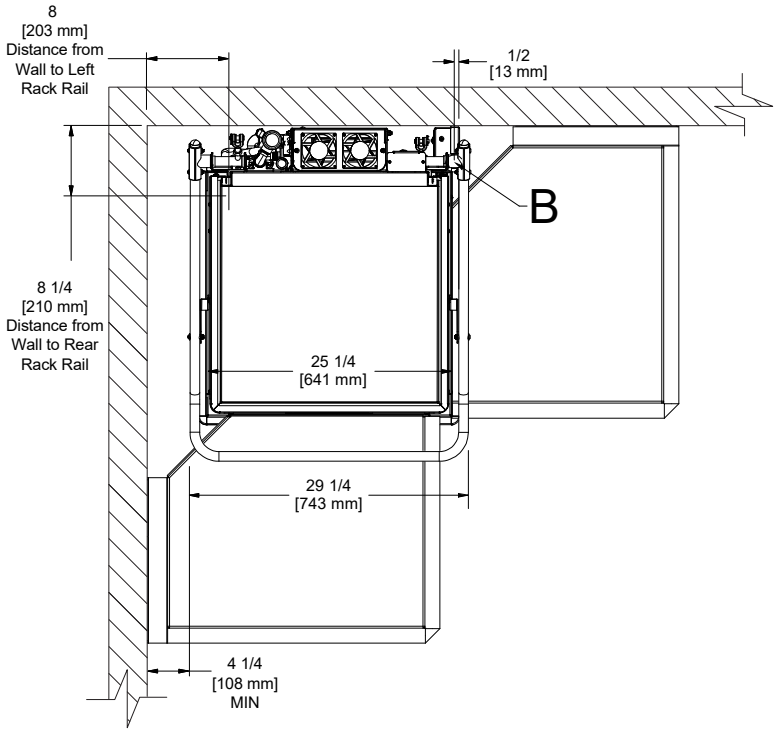

LEGEND

A - Drain Connection (1 1/2” NPT)

B - Water Inlet (1/2” male NPT)
(Connect to true 1/2" ID line or larger)

C - Electrical Connection

D - Detergent Connection

E - Rinse-aid Connection

All dimensions from floor can be increased 1 1/8” using the machine’s adjustable feet.

Dish tables are stationary, so the machine must be moved until rack rails line-up properly. As a result, distances from wall to rack rails might vary.

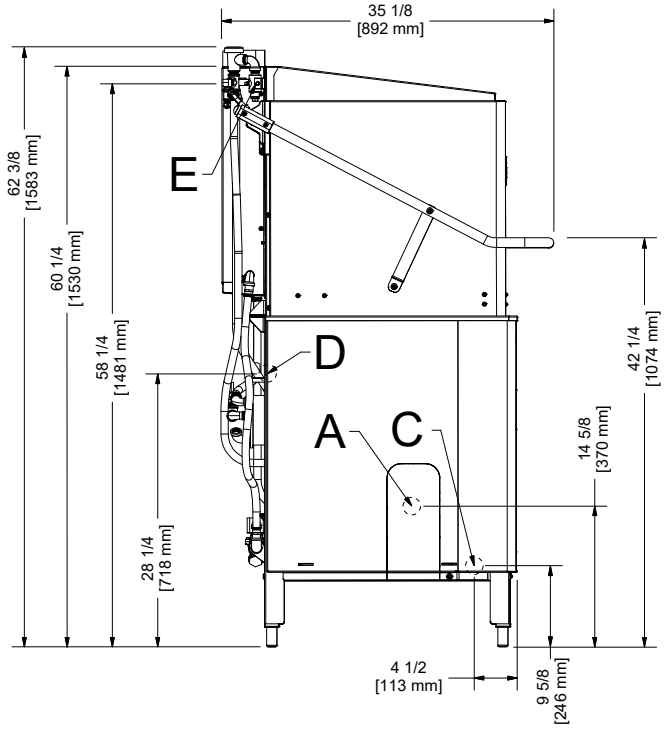

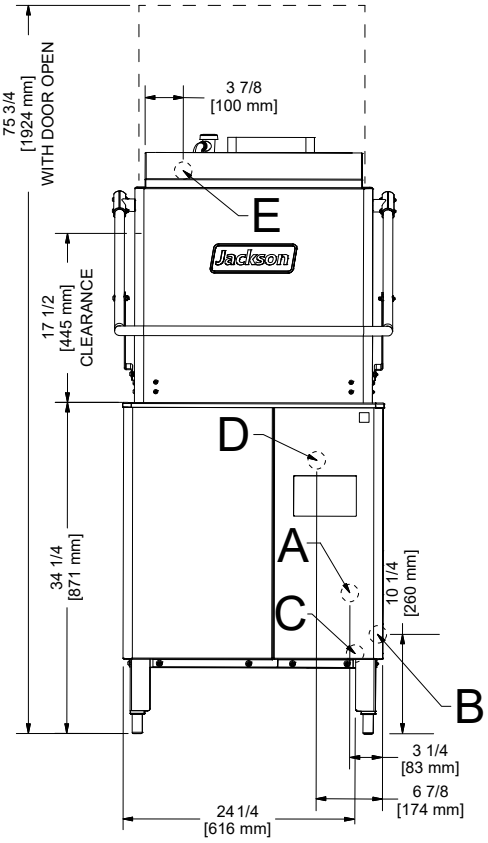

HH-E/NB DIMENSIONS

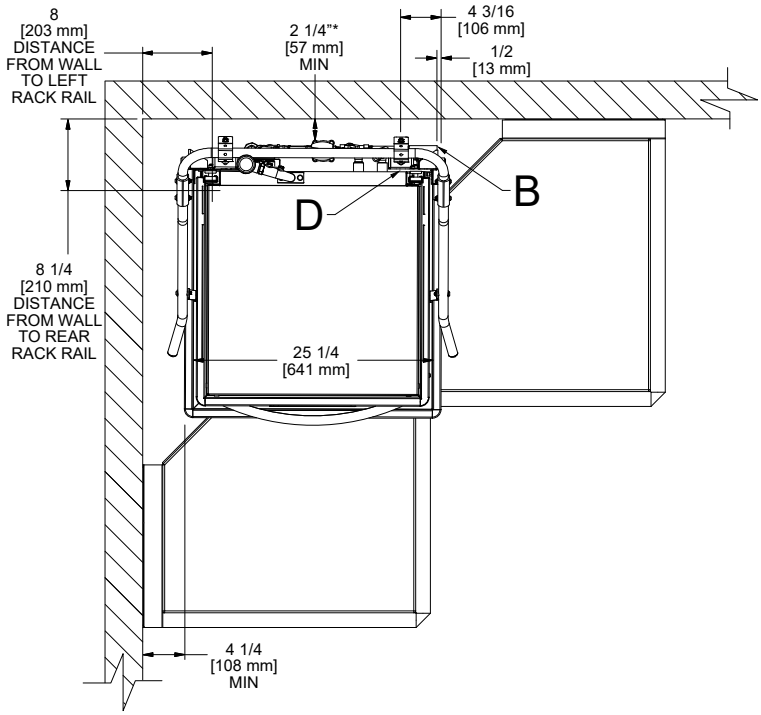

LEGEND

A - Drain Connection (1 1/2” NPT)

B - Water Inlet (1/2” male NPT)
(Connect to true 1/2" ID line or larger)

C - Electrical Connection

D - Detergent Connection

E - Rinse-aid Connection

All dimensions from floor can be increased 1 1/8” using the machine’s adjustable feet.

Dish tables are stationary, so the machine must be moved until rack rails line-up properly. As a result, distances from wall to rack rails might vary.

**Back wall clearance 7/16” if optional door interlock is used.*

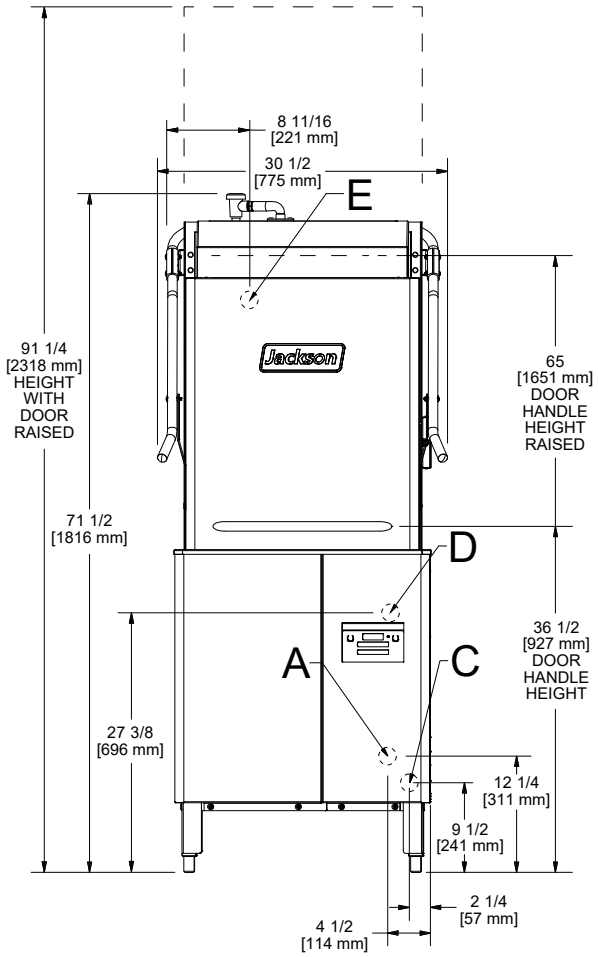

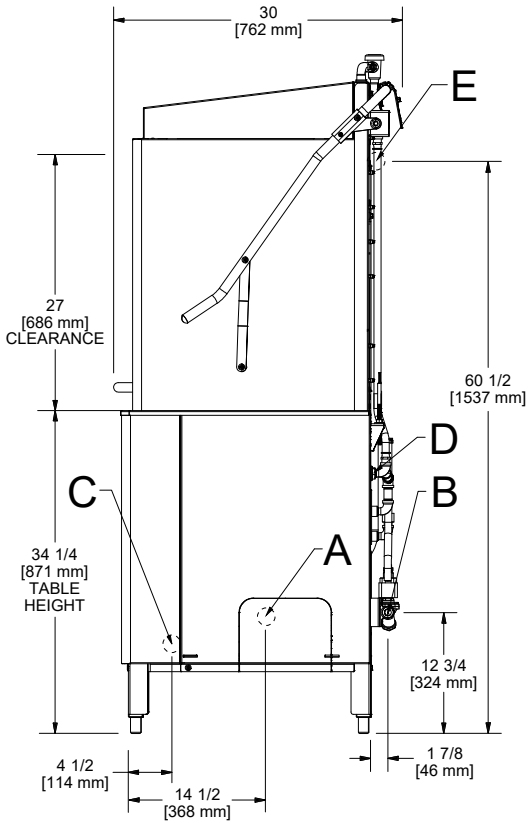

HH-E VER DIMENSIONS

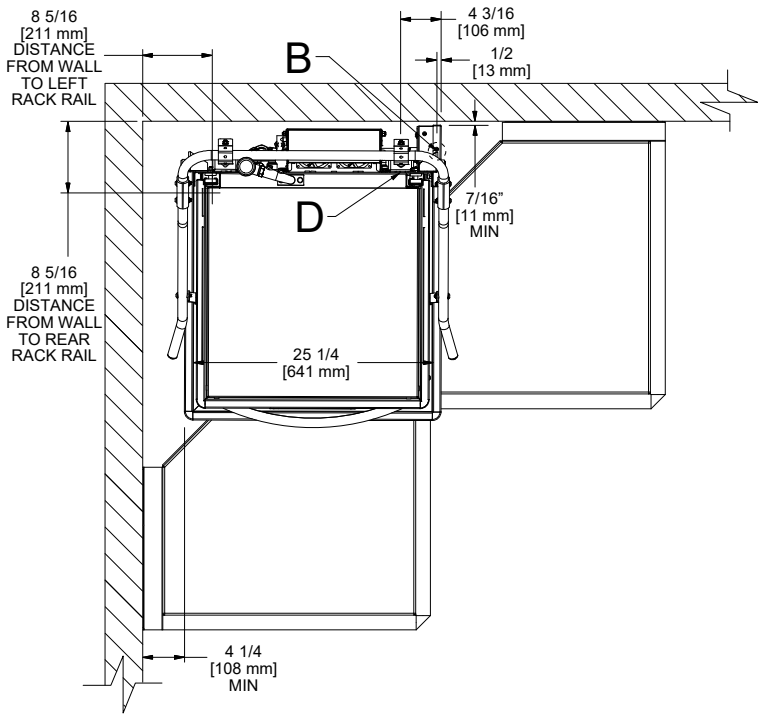

LEGEND

A - Drain Connection (1 1/2" NPT)

B - Water Inlet (1/2" male NPT)
(Connect to true 1/2" ID line or larger)

C - Electrical Connection

D - Detergent Connection

E - Rinse-aid Connection

All dimensions from floor can be increased 1 1/8" using the machine's adjustable feet.

Dish tables are stationary, so the machine must be moved until rack rails line-up properly. As a result, distances from wall to rack rails might vary.

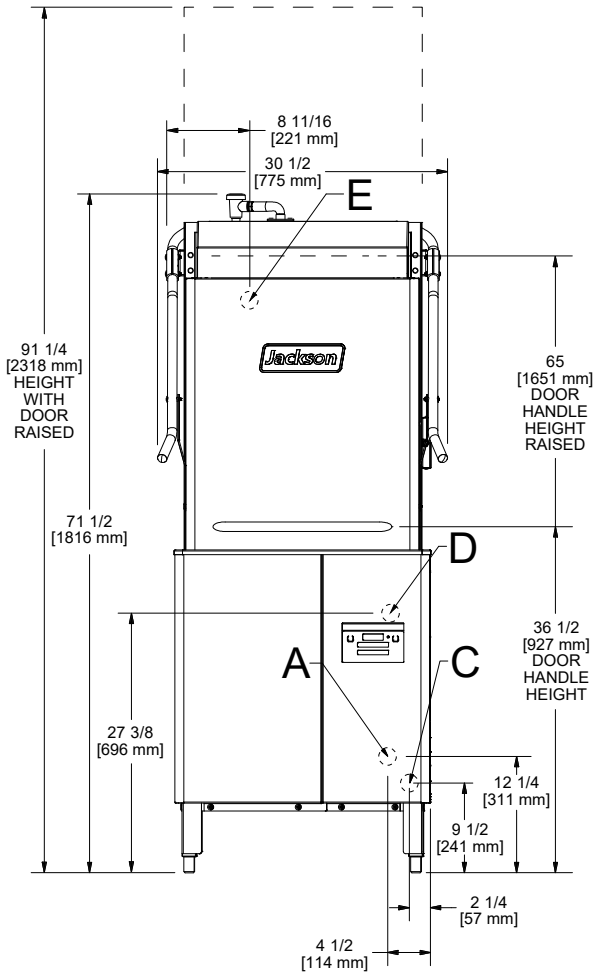

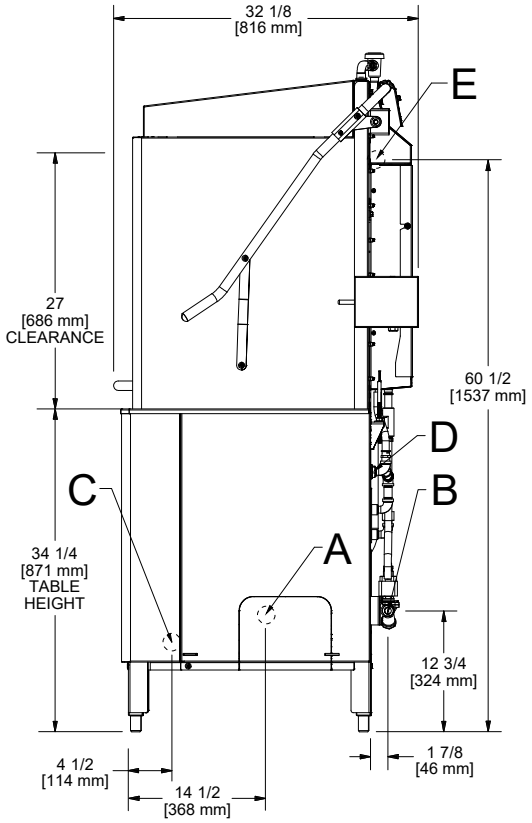

CORNER INSTALLATION

DynaStar
False Panel Option
05700-004-67-60

False Panel/Corner
Installation Instructions

HH-E
False Panel Option
06401-004-89-11

False Panel/Corner
Installation Instructions

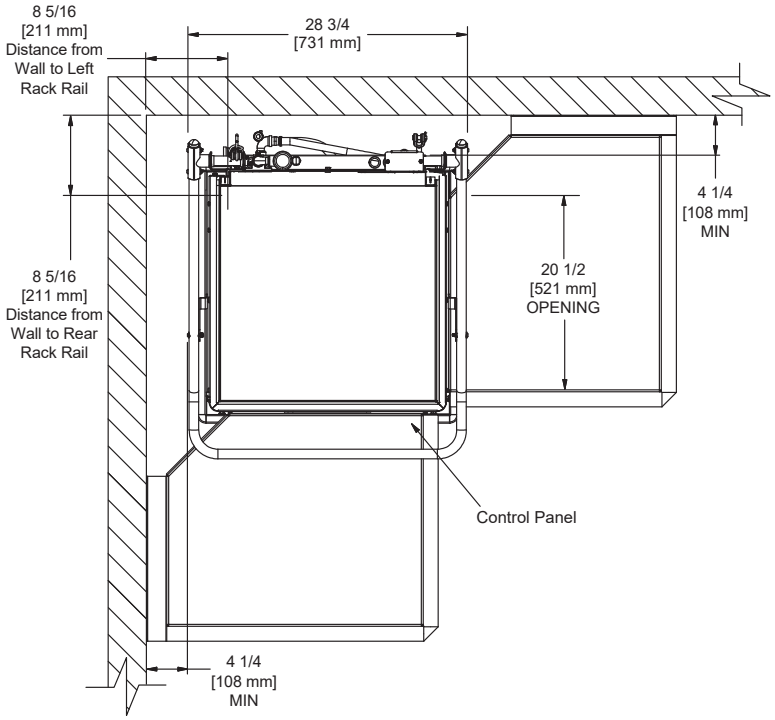

DynaStar shown.

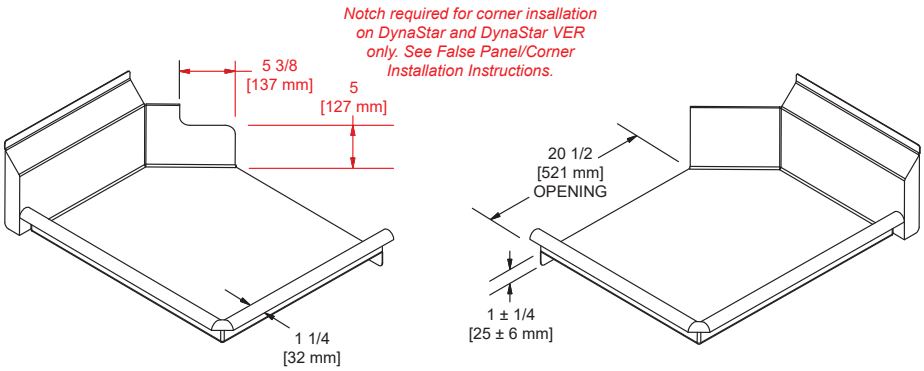

STRAIGHT-THROUGH INSTALLATION

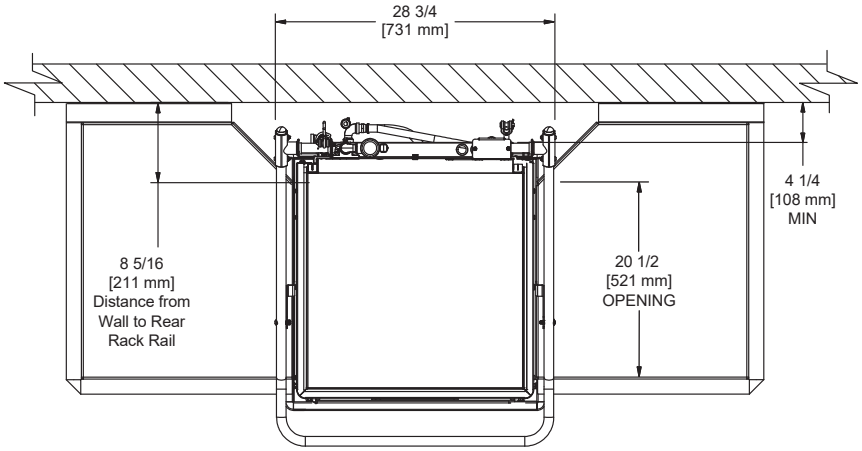

PERFORMANCE/CAPABILITIES

Operating Capacity:

DynaStar/NB/HH-E/HH-E NB

Racks per Hour without Load Time	62
Racks per Hour with Load Time	57
Dishes per Hour without Load Time	1550
Dishes per Hour with Load Time	1425
Glasses per Hour without Load Time	2232
Glasses per Hour with Load Time	2052

DynaStar VER/HH-E-VER

Racks per Hour without Load Time	40
Racks per Hour with Load Time	38
Dishes per Hour without Load Time	1000
Dishes per Hour with Load Time	950
Glasses per Hour without Load Time	1440
Glasses per Hour with Load Time	1368

Minimum Operating Cycle (seconds):

Cycle 1 Wash Time	40
Cycle 2 Wash Time	90
Cycle 3 Wash Time	220
Rinse Time (Econo)	11
Rinse Time (Turbo Option)	14
Dwell Time	7
Cycle 1 Total Time	58
Cycle 2 Total Time	108
Cycle 3 Total Time	238
VER Condensate Removal	30*

Tank Capacity (gallons/liters):

Wash Tank	8.0/30.3
Rinse Tank	1.66/6.3

With Smart Vent off. See **Smart Vent section.*

WATER REQUIREMENTS

DynaStar/HH-E

Wash Temperature (Minimum)	150 °F/66 °C
Rinse Temperature (Minimum)	180 °F/83 °C
Inlet Water Temperature	110 °F/44 °C
Flow Pressure (PSI)	15–65
Water Line Size (NPT)	1/2”
Drain Line Size (NPT)	1 1/2”

DynaStar NB/HH-E NB

Wash Temperature (Minimum)	150 °F/66 °C
Rinse Temperature (Minimum)	180 °F/83 °C
Inlet Water Temperature	180 °F/83 °C
Flow Pressure (PSI)	10 ± 2
Water Line Size (NPT)	1/2”
Drain Line Size (NPT)	1 1/2”

DynaStar VER/HH-E VER

Wash Temperature (Minimum)	150 °F/66 °C
Rinse Temperature (Minimum)	180 °F/83 °C
Inlet Water Temperature	40–90 °F/4.4–32.2 °C
Flow Pressure (PSI)	15–65
Water Line Size (NPT)	1/2”
Drain Line Size (NPT)	1 1/2”

ENERGY SPECIFICATIONS

DynaStar VER/HH-E VER

Latent Heat	6047 Btu/Hr
Sensible Heat	5834 Btu/Hr

ELECTRICAL LOADS

Wash Motor HP (208/230 V)	1
Wash Motor HP (460 V)	3/4
Wash Motor HP (HH-E 208/230 V)	2
Wash Motor HP (HH-E 460 V)	2
Wash Heater kW (208 V)	4.1
Wash Heater kW (230 V)	5.2
Wash Heater kW (460 V)	5.0
Rinse Heater kW (208 V)	9.0
Rinse Heater kW (230 V)	11.2
Rinse Heater kW (460 V)	9.2

NOTICE *Always refer to the machine data plate for specific electrical and water requirements. The material provided on this page is for reference only and may change without notice.*

ELECTRICAL REQUIREMENTS

Local codes may require more stringent protection than what is displayed here. Always verify with your electrical service contractor that your circuit protection is adequate and meets all applicable national and local codes. Numbers in this manual are for reference and may change without notice.

NOTICE

On three-phase machines, imbalanced wild leg goes to L3.
Also see the Motor Rotation section.

DynaStar & DynaStar VER

Volts	Phase	Freq	Wash Motor	Wash Heater	Rinse Motor	Rinse Heater	Total Load	MCA	MOP
208	1	60 Hz	5.0 A	19.7 A	0.8 A	43.3 A	68.8 A	70.1 A	75 A
230	1	60 Hz	5.0 A	21.8 A	0.8 A	47.9 A	75.5 A	76.7 A	80 A
208	3	60 Hz	5.0 A	11.4 A	0.8 A	25.0 A	42.2 A	43.4 A	45 A
230	3	60 Hz	5.0 A	12.6 A	0.8 A	27.7 A	46.0 A	47.3 A	50 A
460	3	60 Hz	1.2 A	6.3 A	0.8 A	11.5 A	19.8 A	20.2 A	25 A

DynaStar NB

Volts	Phase	Freq	Wash Motor	Wash Heater	Rinse Heater	Total Load	MCA	MOP
208	1	60 Hz	5.0 A	19.7 A	N/A	24.7 A	25.9 A	30 A
230	1	60 Hz	5.0 A	21.8 A	N/A	26.8 A	28.0 A	30 A
208	3	60 Hz	5.0 A	11.4 A	N/A	16.4 A	17.6 A	20 A
230	3	60 Hz	5.0 A	12.6 A	N/A	17.6 A	18.8 A	20 A
460	3	60 Hz	1.8 A	6.3 A	N/A	7.5 A	7.8 A	15 A

HH-E & HH-E VER

Volts	Phase	Freq	Wash Motor	Wash Heater	Rinse Motor	Rinse Heater	Total Load	MCA	MOP
208	1	60 Hz	12.1 A	19.7 A	0.8 A	43.3 A	75.9 A	78.9 A	90 A
230	1	60 Hz	10.9 A	22.7 A	0.8 A	48.6 A	83.0 A	85.8 A	90 A
208	3	60 Hz	12.1 A	11.4 A	0.8 A	25.0 A	49.3 A	52.3 A	60 A
230	3	60 Hz	10.9 A	13.1 A	0.8 A	28.1 A	52.9 A	55.6 A	60 A
460	3	60 Hz	2.8 A	6.3 A	0.8 A	11.5 A	21.4 A	22.1 A	25 A

HH-E NB

Volts	Phase	Freq	Wash Motor	Wash Heater	Rinse Heater	Total Load	MCA	MOP
208	1	60 Hz	12.1 A	19.7 A	N/A	31.8 A	34.8 A	45 A
230	1	60 Hz	10.9 A	21.8 A	N/A	33.6 A	36.3 A	45 A
208	3	60 Hz	12.1 A	11.4 A	N/A	23.5 A	26.5 A	35 A
230	3	60 Hz	10.9 A	13.1 A	N/A	24.0 A	26.7 A	35 A
460	3	60 Hz	2.8 A	6.3 A	N/A	9.1 A	9.8 A	15 A

INSPECTION

Do not throw away the container if damage is evident!

Before installing the machine, check packaging and machine for damage. If packaging is damaged, the machine might also be damaged. If there is damage to both packaging and machine, do not throw away packaging. The machine has been inspected and packed at the factory and is expected to arrive in new, undamaged condition. However, rough handling by carriers or others might result in damage to the machine while in transit. If so, do not return the machine to the manufacturer; instead, contact the carrier and ask them to send a representative to the site to inspect the damage and complete an inspection report. You must contact the carrier and dealer within 48 hours of receiving the machine.

UNPACKING

Check for missing parts!

While removing the machine from packaging, ensure there are no missing parts. (reference the Parts section). If an item is missing, contact the manufacturer immediately.

LEVELING

Machine must be level before operating!

The machine must be level in its operating location to prevent damage during operation and to ensure best results. The machine comes with four adjustable bullet feet, which can be turned using a pair of channel locks (or by hand if the machine can be raised safely). Ensure the machine is level from side-to-side and front-to-back before making any connections.

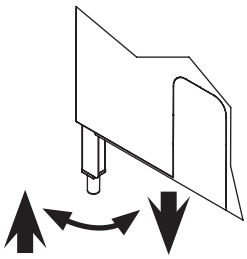

PLUMBING

The plumber must flush the incoming water line!

Plumbing connections must comply with all applicable local, state, and national plumbing codes. The plumber must flush incoming water line thoroughly before connecting plumbing. It is crucial to remove all foreign debris from water line that might potentially get trapped in valves or cause an obstruction. Any valves that are fouled as a result of foreign matter left in the water line—and any expenses resulting from this fouling—are not the responsibility of the manufacturer.

The manufacturer does NOT endorse "Tankless On-demand" water heaters for use with their dishmachines. The manufacturer DOES endorse, and highly recommends, standard "Tank" style water heaters, sized to properly handle the water heating requirements of the facility.

DRAIN LINE CONNECTION

The drain is a gravity-discharge drain. Pitch all piping from the 1 1/2” connection on wash tank 1/4” per foot to floor or sink drain. All piping from the machine to drain must be a minimum 1 1/2” and must not be reduced.

There must be an air-gap between the machine drain line and floor sink or drain. The air-gap must be at least 1.5 times the diameter of drain line. If a grease trap is required by code, ensure it has a flow capacity of 5 GPM.

WATER SUPPLY CONNECTION

CAUTION! *1/2" ID MIN water line must be used!*

A water hardness test must be performed!

NOTICE *Read the Plumbing section on the previous page before proceeding.*

Install water supply line to the machine. Hose or pipe must be 1/2" ID minimum. Using smaller hose or pipe will affect machine performance and related issues are not the responsibility of the manufacturer.

Install a water shut-off valve in the water line between the main supply and the machine to allow access for service.

If water hardness tests greater than 3 GPG, install the Scaltrol Water Treatment system (see the Plumbing Options page) into the water line before the machine's incoming water connection point. If water hardness tests at 3 GPG or less, install the water supply line directly to the machine's incoming water connection point.

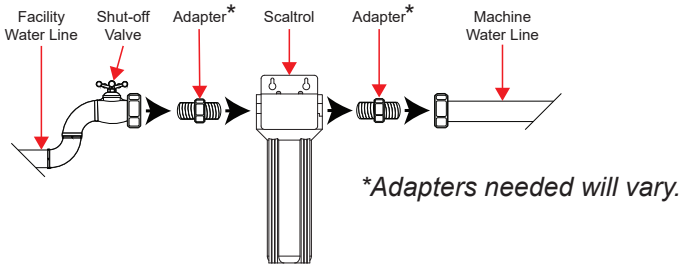

DynaStar and HH-E models are equipped with a rinse pump, so a PRV is not required unless flow pressure is over 65 PSI. Flow pressure under 15 PSI could affect fill/start-up time. DynaStar NB and HH-E NB are not equipped with a rinse pump, so a PRV is recommended (see the Plumbing Options page) and flow pressure is 10 ± 2 PSI.

The manufacturer recommends the installation of a water hammer arrestor in the incoming water line and offers these devices as options. See the Plumbing Options page. This prevents line hammer/hydraulic shock—induced by the solenoid valve as it operates—from causing damage to the equipment.

PLUMBING CHECK

CAUTION! *Repair all leaks before operating machine!*

1. Slowly turn on water supply to the machine after incoming fill line and drain line have been installed.
2. Check for any leaks and repair as required.

CHEMICAL CONNECTIONS

Chemical connections should be made by the chemical supplier.

Using deionized water or other aggressive fluids will result in corrosion and failure of components and will void the warranty.

Detergent

Connect detergent by removing bulkhead fitting on the back of the machine and replacing it with appropriate dispensing equipment.

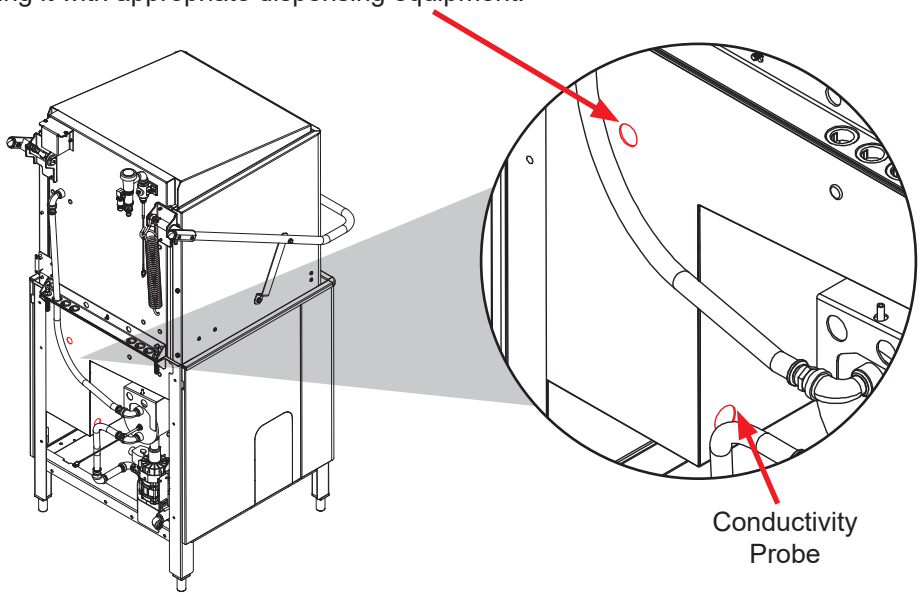

Rinse-aid

Connect rinse-aid by removing one of the brass plugs on side of the rinse injector and replacing it with appropriate dispensing equipment.

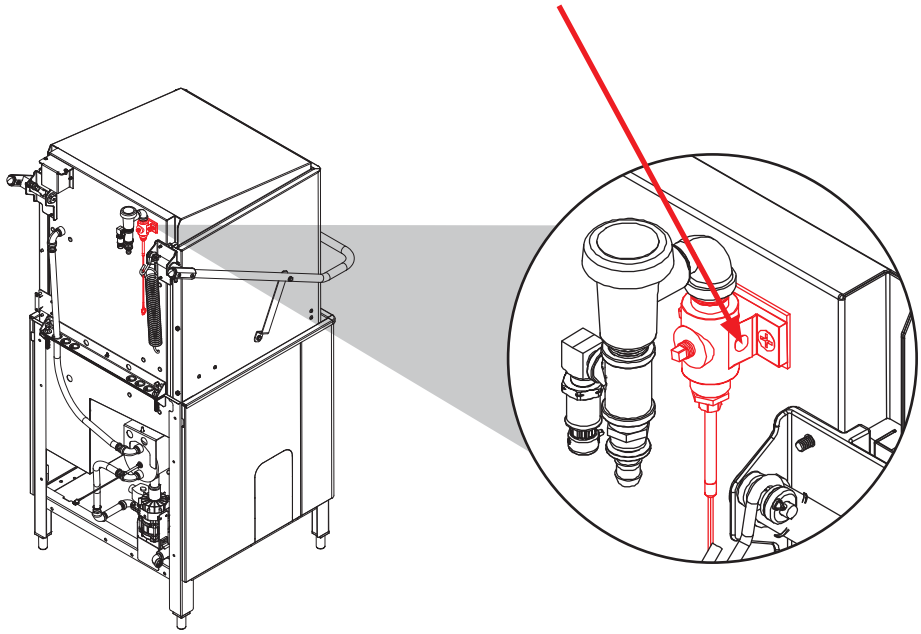

WARNING! ***Some of the chemicals used in dishwashing may cause chemical burns if they come in contact with skin. Wear protective gear when handling these chemicals. If any skin comes in contact with these chemicals, immediately follow the instructions provided with the chemicals for treatment.***

Dispenser Electrical Connections

Electrical connections for chemical dispensers are made on a fuse block on the control panel. Click **here** for a depiction of fuse block and connection locations.

ELECTRICAL POWER CONNECTIONS

Electrical and grounding conductors must comply with the applicable portions of the National Electric Code ANSI/NFPA 70 (latest edition) and/or other electrical codes.

Refer to data plate for machine operating requirements, machine voltage, total amperage, and serial number. Data plate is located on right side of the machine.

Disconnect electrical power supplies and lockout/tagout in accordance with appropriate procedures and codes at the disconnect switch.

1. Open control box by using a phillips screwdriver to remove four screws on front cover.
2. Install 3/4" conduit into pre-punched holes in back of control box.
3. Route incoming-power wires, and connect to power block and grounding lug.
4. Install service wires (L3 for 3-Phase) to appropriate terminals as they are marked on the terminal block.

NOTICE
Imbalanced wild leg goes to L3.

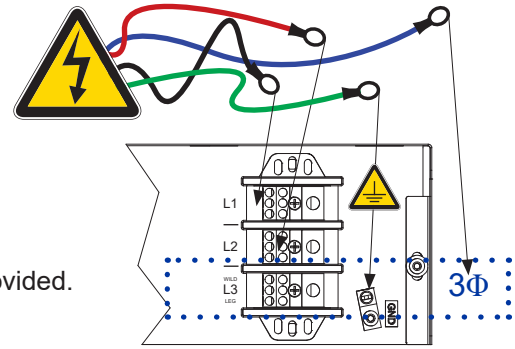

If necessary, see Heaters page for phase conversion kit.

5. Install grounding wire into the lug provided.
6. Tighten connections.

NOTICE *"DE-OX" or similar anti-oxidation agent should be used on all power connections.*

CAUTION! *Improperly connecting external devices can cause damage to the machine and/or electrical infrastructure! Click **here** for a wiring guide.*

MOTOR ROTATION

On 460 V, 3-Phase machines only, verify correct pump motor rotation before operating the machine. Failure to do so can result in damage to the machine and components and may void the warranty.

CAUTION! On 460 V, 3-Phase machines only, verify correct pump motor rotation before operating machine!

1. Follow Filling the Wash Tub section.
2. Remove left side panel of the machine.

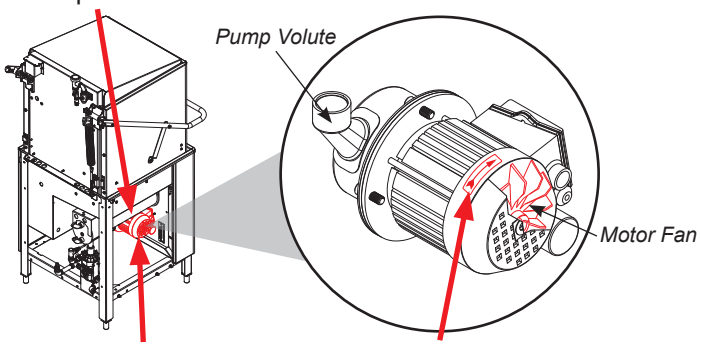

3. Locate wash pump motor and identify arrow decal which shows correct motor rotation (if no decal is present, correct rotation is away from pump volute).
4. Push delime button on display.
5. Observe rotation of motor fan and quickly push delime button again.
6. If rotation is incorrect, disconnect electrical power and reverse L1 and L2 connections at terminal block shown in section above.

VOLTAGE CHECK

1. Ensure power switch is in OFF position and apply power to the machine.
2. Check incoming power at terminal block and ensure it corresponds to voltage listed on data plate. If not, contact a qualified service agency to examine the problem.

CAUTION! *Do not run the machine if voltage is too high or too low (refer to applicable electrical codes).*

3. Shut off service breaker and mark it as being for the machine.
4. Advise all proper personnel of any problems and of location of service breaker.

SURROUNDING AREA

This is a commercial machine and reaches temperatures that can exceed those generated by a residential machine. Surrounding countertops, cabinets, flooring, and subflooring must be designed and/or selected with these higher temperatures in mind.

NOTICE *Any damage to surrounding area caused by heat/moisture to materials that are not recommended for higher temperatures will not be covered under warranty or by the manufacturer.*

TEMPERATURE SETPOINTS

The temperature setpoints on this machine have been set at the factory. They should only be adjusted by an authorized service agent.

SMART VENT (VER MODELS)

Smart Vent technology automatically adjusts venting time based on incoming water temperature. This ensures efficient steam elimination at any temperature in the range, without needing a service call to adjust venting time. If Smart Vent is off, machine vents for 30 seconds.

Doesn't increase water consumption!

< 60 °F	45 seconds venting
60–64 °F	40 seconds venting
65–69 °F	30 seconds venting
70–74 °F	35 seconds venting
75–79 °F	40 seconds venting
80–84 °F	43 seconds venting
85–89 °F	47 seconds venting
90–95 °F	50 seconds venting

PREPARATION

Before operating the machine, verify the following:

1. Pan strainers and suction strainer are in place and are clean.

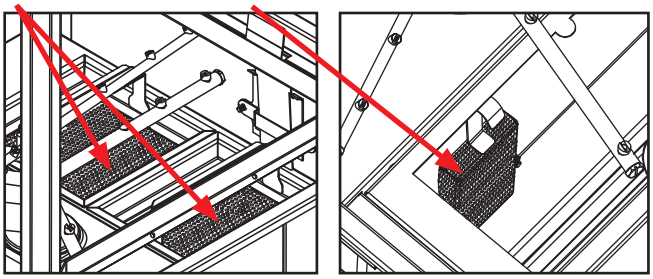

2. Standpipe and o-ring are installed.

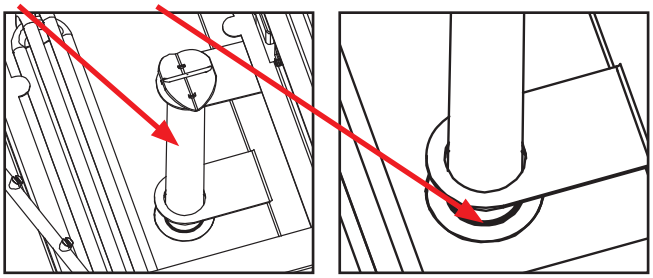

3. Wash and rinse arms are screwed securely into place and end-caps are tight. Wash and rinse arms should rotate freely.

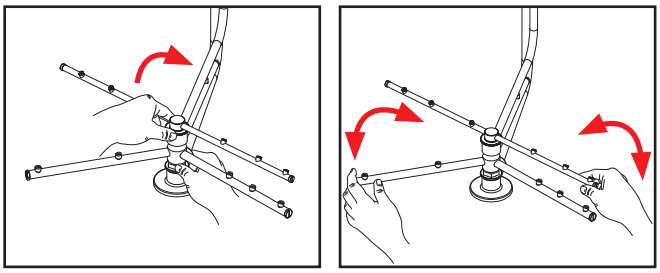

POWER UP

To energize the machine, turn on power at service breaker. Voltage should have been previously verified as correct. If not, verify voltage.

FILLING THE WASH TUB

Press power button and display will come on. The machine will fill with water automatically until appropriate water level is reached (just below pan strainers). Wash tub must be completely filled before operating wash pump to prevent damage to components.

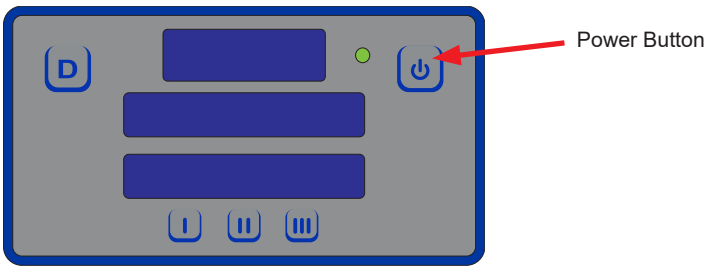

WARE PREPARATION

Proper ware preparation will help ensure good results and fewer re-washes. If not done properly, ware might not come out clean and efficiency of the machine will be reduced. Putting unscraped dishes into the machine affects its performance, so always remove scraps from ware before loading into a rack. Pre-rinsing and pre-soaking are good ideas, especially for silverware and casserole dishes. Place cups and glasses upside-down in racks so they don't hold water during the cycle. The machine sanitizes as well as cleans, so always properly prepare ware before loading in the machine.

DAILY MACHINE PREPARATION

Refer to Preparation section and follow instructions there. Afterward, ensure that chemicals are supplied to the machine. If not, contact your chemical supplier.

When the machine is first powered on for the day/shift, wash tank water must reach set temperature before being operated:

1. Ensure door is closed.
2. Press power button.
3. Machine will fill automatically.
4. Display will show “Heating” until wash tank reaches set temperature.

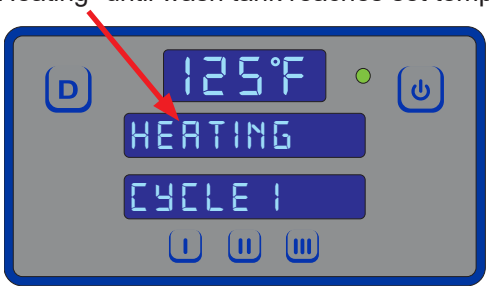

WASHING A RACK OF WARE

1. Ensure wash tank temperature has reached set temperature and display shows "Ready."

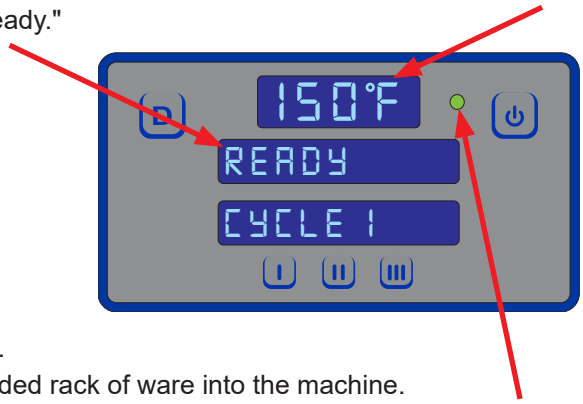

2. Open door.
3. Slide a loaded rack of ware into the machine.
4. Close door. Cycle begins automatically and cycle light comes on.
5. At end of cycle, cycle light will turn off.
6. Open door and remove rack.

TURBO RINSE

Turbo Rinse option is a longer rinse, ensuring optimal rinse and sanitization.

Econo = 11 seconds
Turbo Option = 14 seconds

1. To select Turbo Rinse option, press and hold I button for three seconds.

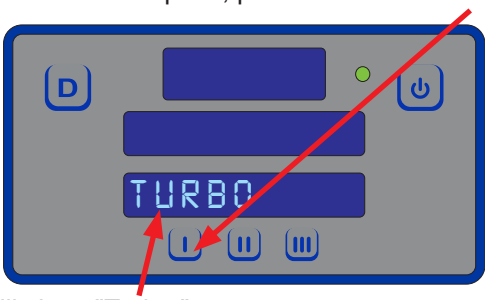

2. Display will show "Turbo."
3. Press and hold I button for three seconds to revert to Econo Rinse. Machine reverts to Econo Rinse (default) when turned off.

SHUTDOWN & CLEANING

1. Close door.
2. When the machine completes cycle, turn the machine off by pressing power button.

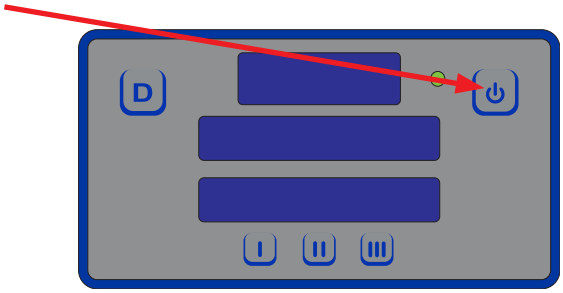

3. Open door.
4. Remove and clean pan strainers and set aside.

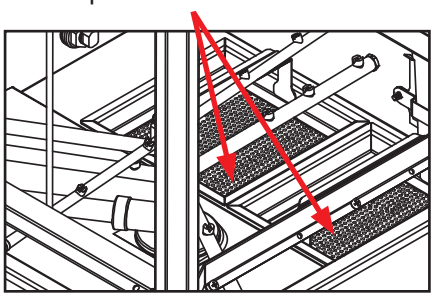

5. Pull drain handle to open position and allow water to drain.

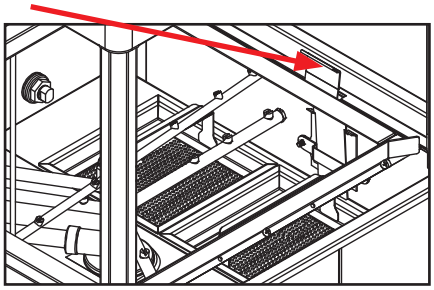

WARNING! ***Wash tank water is hot!***

SHUTDOWN & CLEANING

6. Once wash tub is drained, remove suction strainer, clean, and set aside.

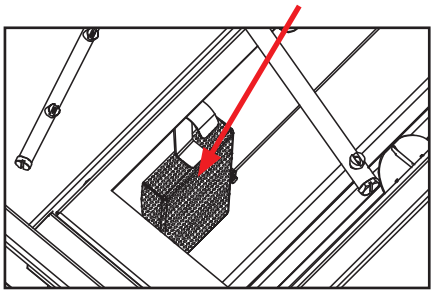

7. Unscrew wash and rinse arms from their manifolds.

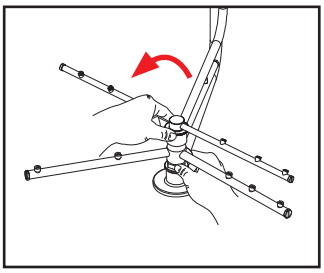

8. Verify nozzles and arms are free from obstruction. If clogged, remove end-caps, clean nozzles with a brush (supplied with the machine), and flush with fresh water.

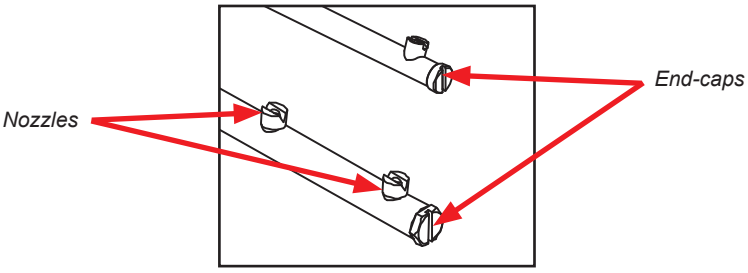

9. Wipe inside of the machine out, removing all soil and scraps.
10. Reassemble wash and rinse arms.
11. Reinstall wash and rinse arms in the machine. Ensure end-caps have been tightened.

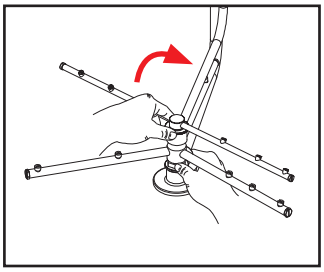

12. Push drain handle to closed position.
13. Replace pan strainers and suction strainer.
14. Leave door open so the machine can dry.

DETERGENT CONTROL

Detergent usage and water hardness are two factors that greatly contribute to the machine's operating efficiency. Using the proper amount of detergent can become a source of substantial savings. A qualified water-treatment specialist can determine what is needed for maximum efficiency from the detergent.

- Hard water greatly affects the performance of the machine, causing the amount of detergent required for washing to increase. If the machine is installed in an area with hard water, the manufacturer recommends the installation of the Scaltrol Water Treatment system (see Plumbing Options page).
- Deposited solids from hard water can cause spotting that will not be removed with a drying agent. Treated water will reduce this occurence.
- Treated water might not be suitable for use in other areas of operation and it might be necessary to install a water treatment system for water going to the machine only. Discuss this option with a qualified water treatment specialist.
- Properly train operators on how much detergent to use per cycle. Meet with a water treatment specialist and chemical supplier to discuss a complete training program for operators.
- This machine requires chemicals for proper operation and sanitization. Third-party chemical feeders are required to pump these chemicals into the machine. Contact a chemical supplier with any questions.
- Water temperature is an important factor in ensuring the machine functions properly. The machine's data plate details what minimum temperatures must be for incoming water supply, wash tank, and rinse tank. If minimum requirements are not met, it's possible dishes will not be clean or sanitized.
- Instruct operators to observe required temperatures and to report when they fall below minimum allowed. A loss of temperature can indicate a larger problem.

DELIMING

To maintain the machine at its optimum performance level, lime and corrosion deposits must be removed. Water conditions will determine the frequency for deliming. A deliming solution is available from your chemical supplier. Read and follow all instructions on the label.

To delime the machine:

1. Disconnect or turn off all chemical feeder equipment.
2. Remove rinse arms and place in sink with deliming solution.
3. Verify standpipe is in position, turn the machine on, and allow the machine to complete a fill cycle.
4. Open door and verify water level is above standpipe. Add deliming solution per the solution manufacturer's recommendation (water capacity of tank can be verified in Specifications section of this manual).
5. Close door and push delime button on display.

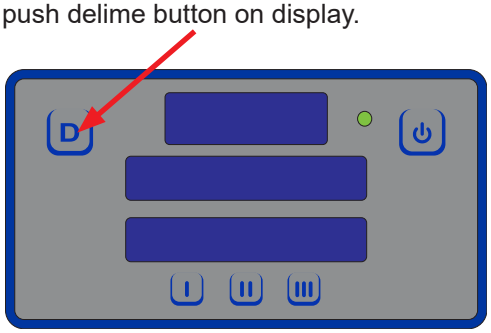

6. Delime cycle runs for eight minutes.
7. Once delime cycle stops, pump will automatically stop.
8. Open door and lift standpipe.
9. Wait five minutes, then inspect inside of the machine. If the machine is not delimed/free of scale, run again.
10. When clean, drain and refill the machine.
11. Run a cycle to remove residual deliming solution.
12. Reinstall rinse arms.
13. Drain and refill the machine.

SETTING CYCLES

Press and release I button to set cycle 1.

Press and release II button to set cycle 2.

Press and release III button to set cycle 3.

CHECKING CYCLE COUNT

While the machine is powered off, press and hold power button. Total cycle count will display for several seconds, followed by a “power-on” condition.

GENERAL

1. When the machine is first connected to power mains, display will go through a sequence to show all LEDs are working.
2. Machine will then go into standby mode with display turned off.
3. Press power button.
4. Display will show “Heating” until wash tank reaches set temperature.

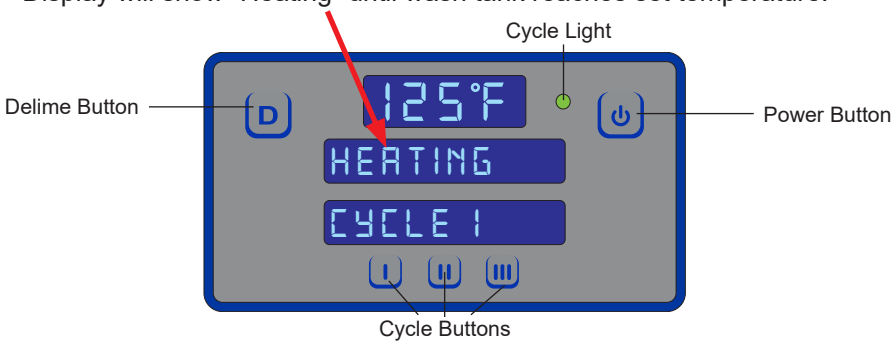

5. Display will show “Ready” when the machine is ready to use.

OPERATIONAL MESSAGES

DISPLAY	INDICATOR
"Check for open door"	Door is open when the machine needs to fill (float switch is down).
"Filling"	Indicates initial fill after the machine is first powered on.
"Heating"	Wash tank and booster have not reached operating temperature during the machine’s initial heating phase.
"Delime"	Delime button has been pressed.
"Ready"	Machine is not in a cycle and ready for next rack.
"Washing"	Machine is in *wash* phase of a cycle with power to wash pump.
"Rinsing"	Machine is in *rinse* phase of a cycle with power to rinse valve; wash pump is turned off.
"Sanitizing"	Machine is in *sanitizing* phase of a cycle. Neither wash pump nor rinse valve are turned on.

PREVENTATIVE MAINTENANCE

Manufacturer highly recommends that only qualified service personnel perform any maintenance and repairs not specifically discussed in this manual.

WARNING! *Unqualified personnel performing maintenance on the machine may void warranty, lead to larger problems, or cause harm to operator.*

Following operating and cleaning instructions in this manual will result in the most efficient results from the machine. As a reminder, here are some steps to take to ensure the machine is being used the way it was designed to work:

1. Ensure water temperatures match those listed on machine data plate. A loss of temperature can indicate a larger problem.
2. Ensure all strainers are clean and securely in place before operating the machine. When cleaning out strainers, do NOT beat them on waste cans. Wipe out strainers with a rag and rinse with water if necessary. Use a toothpick to dislodge any stubborn debris.
3. Ensure all wash and rinse arms are secure in the machine before operating.
4. Ensure standpipe is in position before operating.
5. Remove as much soil from dishes by hand as possible before loading into racks.
6. Do not overfill racks.
7. Ensure glasses are placed upside-down in rack.
8. Ensure all chemicals being injected into the machine are at correct concentrations.
9. Clean the machine at end of every day/shift per the Shutdown and Cleaning section of this manual.
10. Follow all safety procedures, whether listed in this manual or put forth by local, state, or national codes/regulations.

CAUTION!
Do NOT beat strainers to remove debris!

PSI CHECK

If low-water rinse is observed, rinse pump might not be working properly. To verify, check the PSI.

A guide to locating hidden buttons is located behind front panel. Lay guide over display and press where indicated. There's also a printable guide at the end of this manual.

This check is for rinse pressure only, not inlet water pressure.

1. Press PSI check button during rinse cycle (if pressed during wash cycle PSI at end of last rinse cycle is displayed).

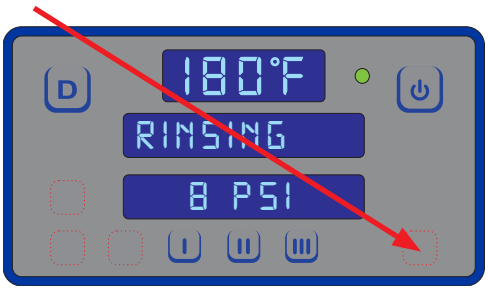

2. Display will show PSI value. It should be 6–8 PSI (10 ± 2 for NB). If not, contact a qualified service agency.
3. Display will go back to default on next cycle.

PROGRAMMING

A guide to locating hidden buttons is located behind front panel. Lay guide over display and press where indicated. There's also a printable guide at the end of this manual.

To access programming, the machine should be on and not in cycle.

Programming buttons (up-arrow, down-arrow, and select) are hidden on display and are shown below as red outlines.

Factory Setup (Model Selection)

1. Press and hold I and III buttons until “Program” starts flashing (2–3 seconds).

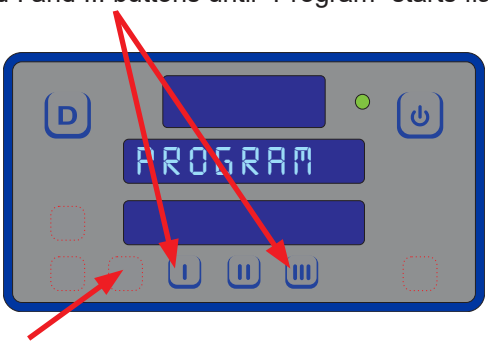

2. Press select button.
3. Use up-arrow or down-arrow button to change program number to correct number in table, based on model.

Pgrm #	Model
2	DynaStar
3	DynaStar VER
4	DynaStar NB

4. Press select button.
5. “Program” will flash.
6. Press delime button to exit.

PROGRAMMING

A guide to locating hidden buttons is located behind front panel. Lay guide over display and press where indicated. There's also a printable guide at the end of this manual.

To access programming, the machine should be on and not in cycle.

Programming buttons (up-arrow, down-arrow, and select) are hidden on display and are shown below outlined with red dots.

User Setup

1. Press and hold up-arrow and down-arrow buttons until “Setup” starts flashing (2–3 seconds).

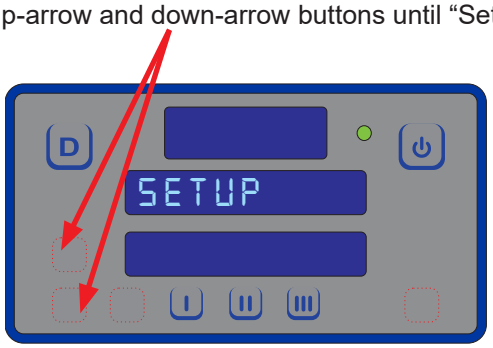

2. Use up-arrow button to cycle through categories (will be flashing).
   - Language
   - Temperature Scale
   - Wash Temperature
   - Boost Temperature
   - Wash Offset
   - Rinse Offset
   - Boost Offset
   - Spare Offset

3. Press select button to choose category you want to change.
   - Regardless of category, Steps 5–7 remain same.
4. Use up-arrow button to change options (will be flashing). Numerical options are shown in top window.

5. Press select button to accept changes.
6. Press delime button to exit.

PROGRAMMING

A guide to locating hidden buttons is located behind front panel. Lay guide over display and press where indicated. There's also a printable guide at the end of this manual.

To access programming, the machine should be on and not in cycle.

Programming buttons (up-arrow, down-arrow, and select) are hidden on display and are shown below outlined with red dots.

Incoming Water Temperature Check

1. When machine is in Sanitize part of cycle (also during Venting if VER model), press PSI check button.

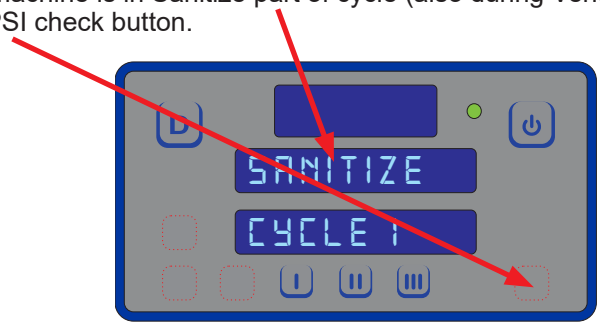

2. Incoming water temperature will display then disappear. Pressing PSI check button again will display temperature again.

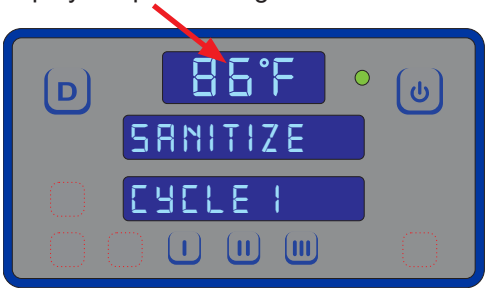

Firmware Version Check

1. Press and hold up-arrow and down-arrow buttons until “Setup” starts flashing (2–3 seconds).

2. Display changes to “Version” and shows firmware versions of the I/O module and digital display.

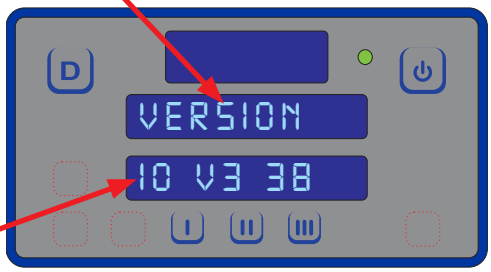

Version scrolls on bottom display.

DISPLAY SHOWS	POSSIBLE CAUSE	REMEDY
“F1 Service needed,” “No water in Booster”	1. Low or no water pressure. 2. Faulty booster LLC. 3. Faulty inlet valve or fill relay. 4. Contactor to booster heater not turning off. 5. Faulty temperature input (P12) on I/O module. 6. Faulty temperature probe (T3). 7. Faulty float switch allows heaters to operate with no water in tank.	1. Perform PSI check (see Preventative Maintenance page). 2. Replace LLC. 3. Verify that fill relay is supplying voltage to fill solenoid. Replace faulty component. 4. Check for welded contacts. Verify that output from I/O module turns off when above the set temperature. 5. Substitute a 1.2 kΩ resistor for T3, and verify that booster heater turns off. If not, replace I/O module. 6. Verify booster-probe resistance is correct with respect to temperature (see table on pg. 23). If not, replace T3. 7. Replace float switch.
“F2 Service needed,” “Check booster thermostat”	1. Contactor to booster heater not turning off. 2. Faulty temperature input (P12) on I/O module. 3. Faulty temperature probe (T3).	1. Check for welded contacts. Verify output from I/O module turns off when above set temperature. 2. Substitute a 1.2 kΩ resistor for T3, and verify booster heater turns off. If not, replace I/O module. 3. Verify booster probe resistance is correct with respect to temperature (see table on pg. 23). If not, replace T3.
“F3 No water in wash tank,” “Check inlet water and door”	1. Malfunction of fill solenoid or fill relay. 2. Door is open, which inhibits fill mode. 3. Faulty door switch.	1. Replace faulty component. 2. Close door to activate door switch. 3. Replace or adjust door switch.
"F4 Service needed," "Check incoming power"	1. Incoming power not properly connected. 2. L3 is missing (3-phase machines only).	1. Check connections to heater. 2. Verify L3 is present and connected properly.
“F5 Service needed,” “Check booster thermostat and high limit”	1. Faulty temperature input (P12) on I/O module. 2. Faulty temperature probe (T3). 3. Faulty high-limit switch. 4. Faulty booster heater. 5. Booster-heater contactor not energizing.	1. Substitute a 1.8 kΩ resistor for T3, and verify booster heater turns on. If not, replace I/O module. 2. Verify T3 resistance is consistent with table on pg. 23. If not, replace T3. 3. Replace high-limit switch. 4. Check booster heater for proper resistance. Replace if incorrect. 5. Verify drive voltage to contactor coil is present during a call for heat and that contactor closes. If voltage is present, replace contactor. If voltage is not present, check wiring.

DISPLAY SHOWS	POSSIBLE CAUSE	REMEDY
"F6 Service needed," "No water in wash tank"	1. Low or no water pressure. 2. Faulty inlet valve or fill relay. 3. Contactor to wash heater not turning off. 4. Faulty temperature input (T1) on I/O module. 5. Faulty temperature probe (T1). 6. Faulty float switch allows heaters to operate with no water in tub.	1. Perform PSI check (see Preventative Maintenance page). 2. Verify fill relay is supplying voltage to fill solenoid. Replace faulty component. 3. Check for welded contacts. Verify output from I/O module turns off when above set temperature. 4. Substitute a 1.2 kΩ resistor for T1, and verify wash heater turns off. If not, replace I/O module. 5. Verify T1 resistance is correct with respect to temperature (see table on pg. 23). If not, replace T1. 6. Replace float switch.
"F7 Service needed," "Check wash tank thermostat"	1. Contactor to wash heater not turning off. 2. Faulty temperature input (P10) on I/O module. 3. Faulty temperature probe (T1).	1. Check for welded contacts. Verify output from I/O module turns off when above set temperature. 2. Substitute a 1.2 kΩ resistor for T1, and verify wash heater turns off. If not, replace I/O module. 3. Verify T1 resistance is correct with respect to temperature (see table on pg. 23). If not, replace T1.
"F8 No water in wash tank," "Check inlet water and door"	1. Malfunction of fill solenoid or fill relay. 2. Door is open, which inhibits fill mode. 3. Faulty door switch.	1. Replace faulty solenoid or fill relay. 2. Close door to activate door switch. 3. Replace or adjust door switch.
"F9 Service needed," "Check incoming power"	1. Incoming power not properly connected. 2. L3 is missing (3-phase machines only).	1. Check connections to heater. 2. Verify L3 is present and connected properly.
"F10 Service needed," "Check wash tank thermostat and high limit"	1. Faulty temperature input (T1) on I/O module. 2. Faulty temperature probe (T1). 3. Faulty high-limit switch. 4. Faulty wash heater. 5. Wash-heater contactor not energizing.	1. Substitute a 1.8 kΩ resistor for T1, and verify wash heater turns on. If not, replace I/O module. 2. Verify T1 resistance is correct with respect to temperature (see table on pg. 23). If not, replace T1. 3. Replace high-limit switch. 4. Check wash heater for proper resistance. Replace if incorrect. 5. Verify drive voltage to contactor coil is present during a call for heat and that contactor closes. If voltage present, replace contactor. If voltage not present, check wiring.
F11 Service needed –check wash tank thermostat	Faulty temperature probe (T1).	Replace probe that connects to P10.

DISPLAY SHOWS	POSSIBLE CAUSE	REMEDY
"F12 Service needed–check booster thermostat"	Faulty temperature probe (T3).	Replace probe that connects to P13.
"F13 Communication error," "Check 6-pin cable"	1. Loose connection in 6-pin cable between display board and I/O module. 2. Faulty 6-pin cable between display board and I/O module. 3. Faulty communication port on I/O module or display board.	1. Fully disconnect 6-pin cable at each end, and reconnect each end until a click is heard. 2. Inspect for broken wire or unseated terminal by gently pulling on each wire at each end of the cable. Reseat any loose terminals by inserting it fully into housing using long-nosed pliers. Replace cable if broken wire is found. 3. Temporarily substitute a verified good display board, and check if F13 message recurs. If so, repeat substitution with a good I/O module.
"F14 Service needed," "Check incoming water pressure or LLC"	1. Low or no water pressure. 2. Corroded or faulty tank float. 3. Faulty fill valve or fill valve not receiving power.	1. Perform PSI check (see Preventative Maintenance page). 2. Clean or replace tank float. 3. Check continuity and replace if faulty.
"F17 Excessive inlet water temp"	Inlet water supply too hot.	Ensure inlet water supply is at required temperature.
"F18 Bottom tank float"	Corroded or faulty float.	Clean or replace float.
"F19 Top tank float"	Corroded or faulty float.	Clean or replace float.
"F20 Booster LLC"	Corroded or faulty LLC.	Clean or replace LLC.

RESISTANCE-TO-TEMPERATURE VALUES

R (kΩ)	°F	R (kΩ)	°F
11.58	69.8	2.18	159.8
10.37	75.2	1.58	179.6
9.30	80.6	1.45	185.0
7.78	89.6	1.33	190.4
3.05	140.0	1.16	199.4
2.54	150.8	0.96	212.0

TROUBLESHOOTING

WARNING! *Inspection, testing, and repair of electrical equipment should only be performed by a qualified service technician. Many tests require the machine to have power to it and live electrical components be exposed. USE EXTREME CAUTION WHEN TESTING THE MACHINE.*

OBSERVATION	POSSIBLE CAUSE	REMEDY
Digital display does not illuminate after power button is pressed.	1. Service breaker tripped. 2. Machine not connected to power source. 3. Faulty power source.	1. Reset breaker. If it trips again, contact an electrician to verify amp draw of the machine. 2. Verify the machine has been properly connected to power source. 3. Verify wiring to breaker switch.
Machine does not fill when powered on (door must be closed.)	1. Tank already full. 2. Faulty rinse solenoid valve. 3. Faulty door switch. 4. Faulty float switch.	1. N/A 2. Repair or replace valve as required. 3. Verify wiring of switch; if correct, replace switch. 4. Verify wiring of both float switches; if correct, replace switch.
Machine will not begin wash cycle upon closing door.	1. Wash motor faulty/damaged. 2. Wash motor contactor faulty. 3. Timer module is faulty. 4. I/O module is faulty.	1. Verify wash motor is receiving power; if so, replace motor. 2. Verify contactor energizes; if so, with contactor energized, verify continuity across poles; if contacts are open, replace contactor. 3. Verify module is receiving power (red LED is on); if so, replace module. 4. Verify module is receiving power (green LEDs are on); if so, replace module.
Machine continuously washes.	1. Machine is in Delime mode, which will be indicated on display. 2. Timer module is faulty.	1. Turn off Delime mode by pressing delime button. 2. Verify module is receiving power (green LEDs are on); if so, replace module.
Wash or rinse heater does not work.	1. Faulty heater element. 2. Faulty heater contactor. 3. Faulty temperature probe (T1-wash tank, T3-rinse tank). 4. High-limit thermostat is tripped.	1. Verify element has very low resistance (< 20 Ω) across terminals. If high resistance or open, replace heater. 2. Verify contactor energizes; if so, with contactor energized, verify continuity across poles; if contacts are open, replace contactor. 3. Measure probe's resistance with ohmmeter, which should be ~10 kΩ at 77 °F. Replace probe if much different than this value. Reference: resistances at 70 °F & 85 °F are ~11.9 kΩ & 7.4 kΩ, respectively. 4. Contact a qualified service agency.
Machine fills slowly.	1. Y-strainer is clogged	1. Clean Y-strainer.

TROUBLESHOOTING

WARNING! *Inspection, testing, and repair of electrical equipment should only be performed by a qualified service technician. Many tests require the machine to have power to it and live electrical components be exposed. USE EXTREME CAUTION WHEN TESTING THE MACHINE.*

OBSERVATION	POSSIBLE CAUSE	REMEDY
Rinse water is heated, but not reaching required temperature.	1. Faulty rinse heater. 2. Faulty temperature probe (T2- rinse injector, T3-rinse tank). 3. I/O module is faulty.	1. Verify element has very low resistance (< 20 Ω) across terminals. If high resistance or open, replace the heater. 2. Measure probe's resistance with ohmmeter, which should be ~10 kΩ at 77 °F. Replace probe if much different than this value. Reference: resistances at 70 °F & 85 °F are ~11.9 kΩ & 7.4 kΩ, respectively. 3. Verify module is receiving power (green LEDs are on); if so, replace module.
Low-water rinse.	1. Rinse pump not performing properly. 2. Clogged or obstructed rinse arms.	1. Perform PSI check (see Preventative Maintenance page). 2. Remove and clean rinse arms.
Wash water is not reaching required temperature.	1. Faulty wash heater. 2. Faulty temperature probe (T1). 3. I/O module is faulty.	1. Verify element has very low resistance (< 20 Ω) across terminals. If high resistance or open, replace heater. 2. Measure probe's resistance with ohmmeter, which should be ~10 kΩ at 77 °F. Replace probe if much different than this value. Reference: resistances at 70 °F & 85 °F are ~11.9 kΩ & 7.4 kΩ, respectively. 3. Verify module is receiving power (green LEDs are on); if so, replace module.
Door will not close completely.	1. Improper spring tension. 2. Obstruction in door slide channel.	1. Adjust spring tension to desired stiffness by loosening (not removing) spring bolt nuts near bottom of machine, and adjusting tension. Tighten nuts back when done. 2. Remove obstruction.
Water leaks at wash pump.	1. Wash pump seal defective. 2. Loose hoses (hose clamps) on wash pump.	1. Replace seal. 2. Tighten hose clamps.
Will not rinse during cycle.	1. Defective rinse solenoid. 2. Timer module is faulty.	1. Repair or replace rinse solenoid. 2. Verify module is receiving power (green LEDs are on); if so, replace module.
Dishes are not coming clean.	1. Machine temperatures are below minimum requirements. 2. No detergent or too much detergent. 3. Solid dispenser canister is empty.	1. Verify incoming water, rinse water, and wash water match required temperatures as listed on the machine data plate. 2. Adjust detergent concentration as required for amount of water held by the machine. 3. Replace canister.

CONTROL PANEL, 208-230 V

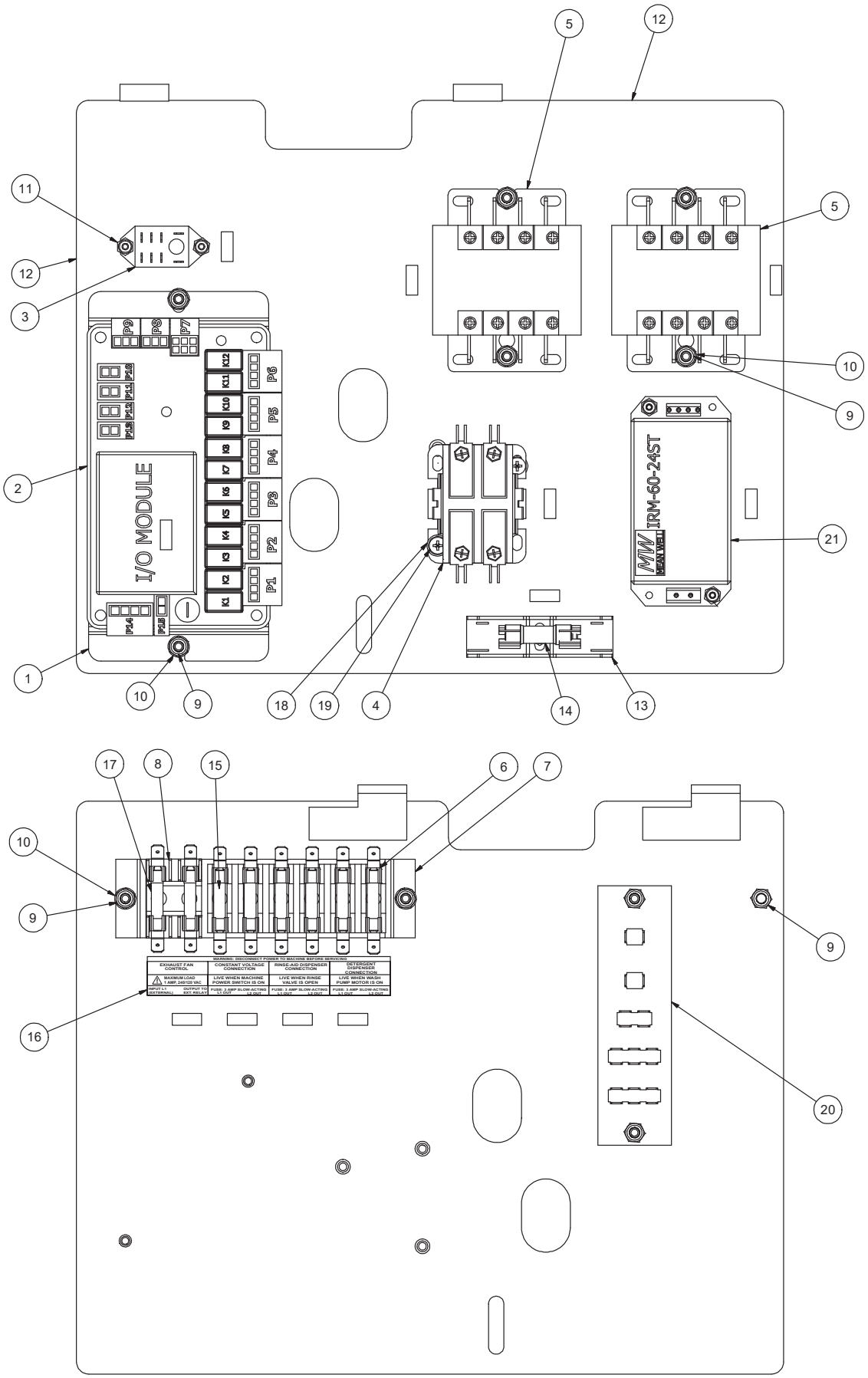

CONTROL PANEL, 208-230 V

ITEM	QTY	DESCRIPTION	PART NUMBER
1	1	Bracket, Timer & I/O Board	05700-004-60-47
2*	1	I/O Module*	06401-004-76-13*
3	1	Relay	05945-111-89-75
4	1	Contactor, 240 V 30 A	05945-002-74-20
5	2	Contactor, 4-Pole, 208-240 V 30 A	05945-004-43-74
6	1	Fuse Holder, 6-pole	05920-002-42-13
7	1	Bracket, Fuse Strip	05700-002-42-03
8	1	Fuse Holder, 2-pole	05920-401-03-14
9	10	Locknut, 10-24 Hex with Nylon Insert	05310-373-01-00
10	10	Washer, Flat	05311-173-02-00
11	5	Locknut, 10-24 Hex with Nylon Insert	05310-373-03-00
12	1	Panel, Electrical Main	05700-004-84-06
13	1	Fuse Holder, Single	05920-011-72-89
14	1	Fuse, 10 A	05920-004-89-65
15	6	Fuse, Slow-acting, 3 A	05999-004-44-34
16	1	Decal, Dispenser Connection	09905-003-34-09
17	2	Fuse, Fast-acting, 1 A	05999-004-47-87
18	3	Fastener, 10-32	05340-111-47-27
19	2	Screw, 10-32 x 1/2"	05305-011-44-52
20	1	Terminal Board	05940-002-78-97
21	1	Power Supply (VER)	05950-004-81-79

Machines with serial numbers before 22D405278 have a different I/O module. Click **here to open earlier manual.*

CONTROL PANEL, 460 V

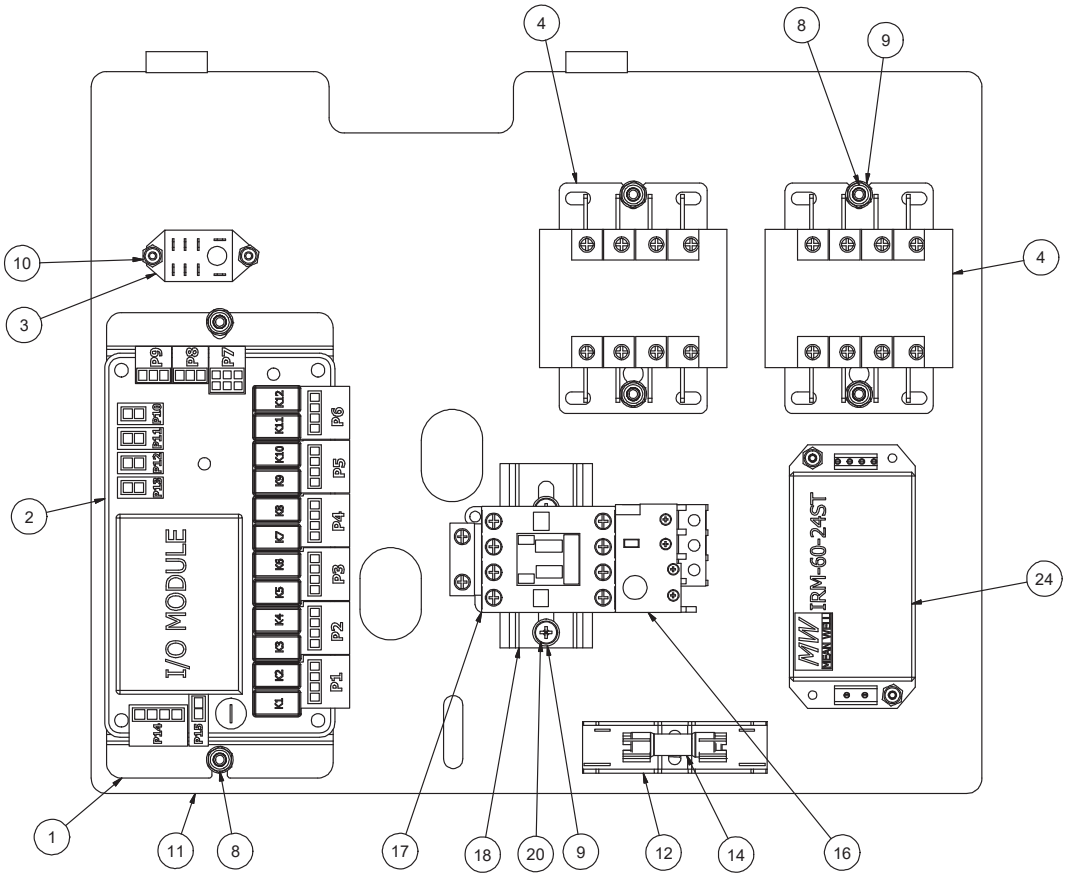

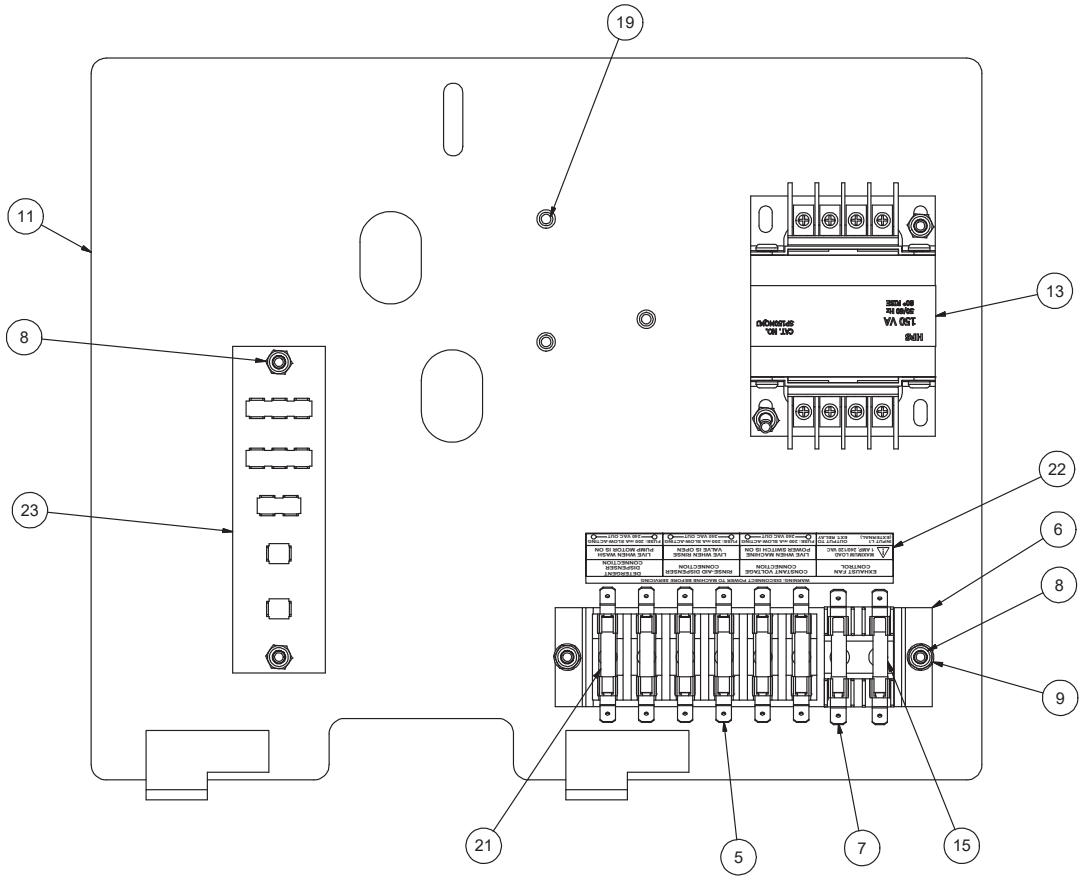

CONTROL PANEL, 460 V

ITEM	QTY	DESCRIPTION	PART NUMBER
1	1	Bracket, Timer & I/O Board	05700-004-60-47
2*	1	I/O Module*	06401-004-76-13*
3	1	Relay	05945-111-89-75
4	2	Contactor, 4-Pole, 208-240 V 30 A	05945-004-43-74
5	1	Fuse Holder, 6-pole	05920-002-42-13
6	1	Bracket, Fuse Strip	05700-002-42-03
7	1	Fuse Holder, 2-pole	05920-401-03-14
8	10	Locknut, 10-24 Hex with Nylon Insert	05310-373-01-00
9	10	Washer, Flat	05311-173-02-00
10	3	Locknut, 10-24 Hex with Nylon Insert	05310-373-03-00
11	1	Panel, Electrical Main	05700-004-84-06
12	1	Fuse Holder, Single	05920-011-72-89
13	1	Transformer, 150 V	05950-004-71-04
14	1	Fuse, 10 A	05920-004-89-65
15	2	Fuse, Fast-acting, 1 A	05999-004-47-87
16	1	Overload	05945-002-65-02
17	1	Motor, Contactor	05945-002-65-00
18	1	Din-rail, 3"	05700-011-84-65
19	3	Fastener, 10-32	05340-111-47-27
20	2	Screw, 10-32 x 1/2"	05305-011-44-52
21	6	Fuse, Slow-acting, 200 mA	05999-004-44-33
22	1	Decal, Dispenser Connection, 460 V	09905-004-43-81
23	1	Terminal Board	05940-002-78-97
24	1	Power Supply (VER)	05950-004-81-79

Machines with serial numbers before 22D405278 have a different I/O module. Click **here to open earlier manual.*

DYNASTAR HOOD

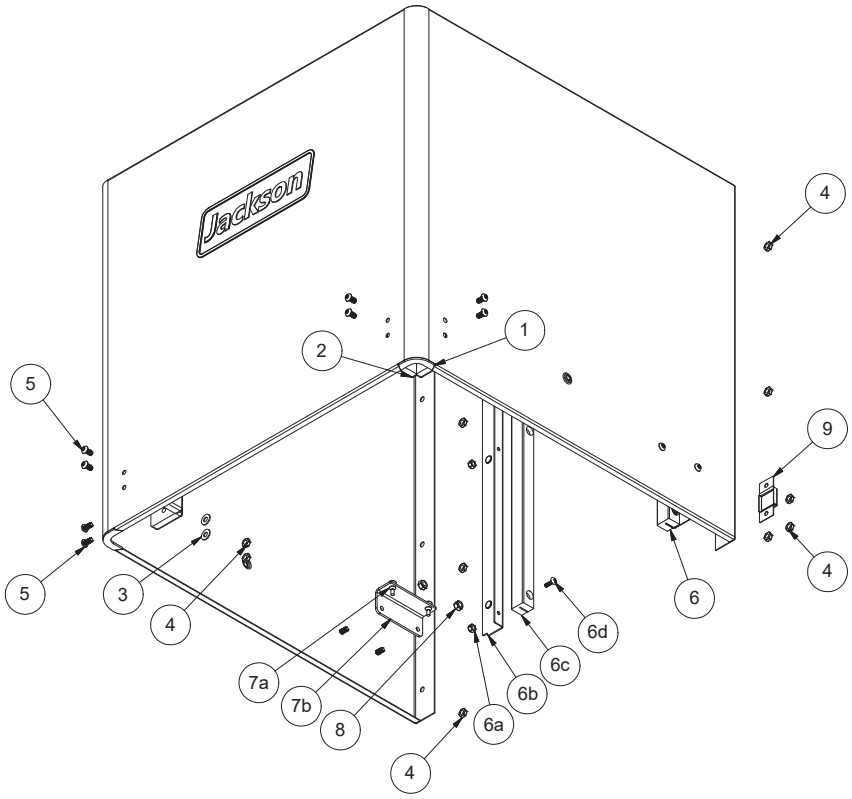

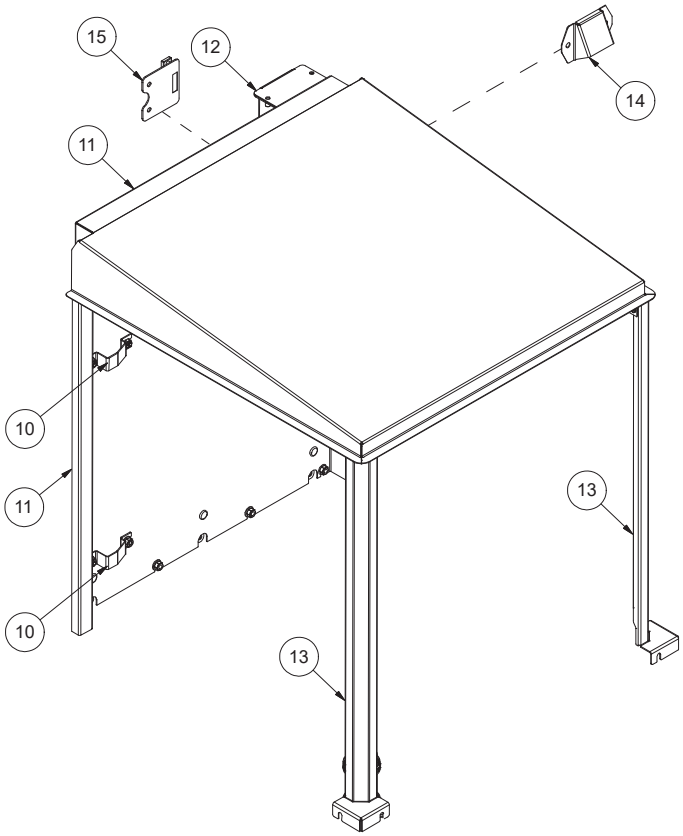

ITEM	QTY	DESCRIPTION	PART NUMBER
1	2	Brace, Hood Front Corner	05700-004-58-91
2	4	Guide Block, Front	09330-004-57-97
3	8	Washer, 1/4-20	05311-174-01-00
4	16	Locknut, 1/4-20 with Nylon Insert	05310-374-02-00
5	12	Screw, 1/4-20 x 1/2" Button Head Hex	05305-004-62-33
6	1	Complete Rear Guide Rail Assembly, Left	05700-004-65-73
		Complete Rear Guide Rail Assembly, Right	05700-004-65-74
6a	6	Locknut, 10-32 with Nylon Insert	05310-373-02-00
6b	1	Bracket, Door Guide, Left	05700-004-58-03
		Bracket, Door Guide, Right	05700-004-58-01
6c	2	Rear Guide Rail	09330-004-57-96
6d	6	Screw, 10-32 x 5/8"	05305-003-02-12
7	2	Complete Door Stop Assembly	05700-004-65-61
7a	4	Bumper, Door Stop	05700-004-14-25
7b	2	Bracket, Door Stop	05700-004-58-61
8	4	Locknut, 1/4-20 Hex with Nylon Insert	05310-374-01-00
9	1	Complete Door Magnet Assembly	05700-004-67-96
10	2	Bracket, Manifold	05700-004-58-88
11	1	Hood Top	05700-004-58-12
12	1	Complete Pressure Switch Assembly	05700-004-65-60
12a	1	Cover, Pressure Switch (Not Shown)	05700-004-61-40
12b	1	Wrap, Pressure Switch (Not Shown)	05700-004-65-58
12c	1	Pressure Switch (Not Shown)	05945-004-61-43
13	2	Hood Support	05700-004-66-10
14	1	Shield, Air-gap	05700-002-13-35
15	1	Door Switch Assembly	05700-004-65-67

HH-E HOOD

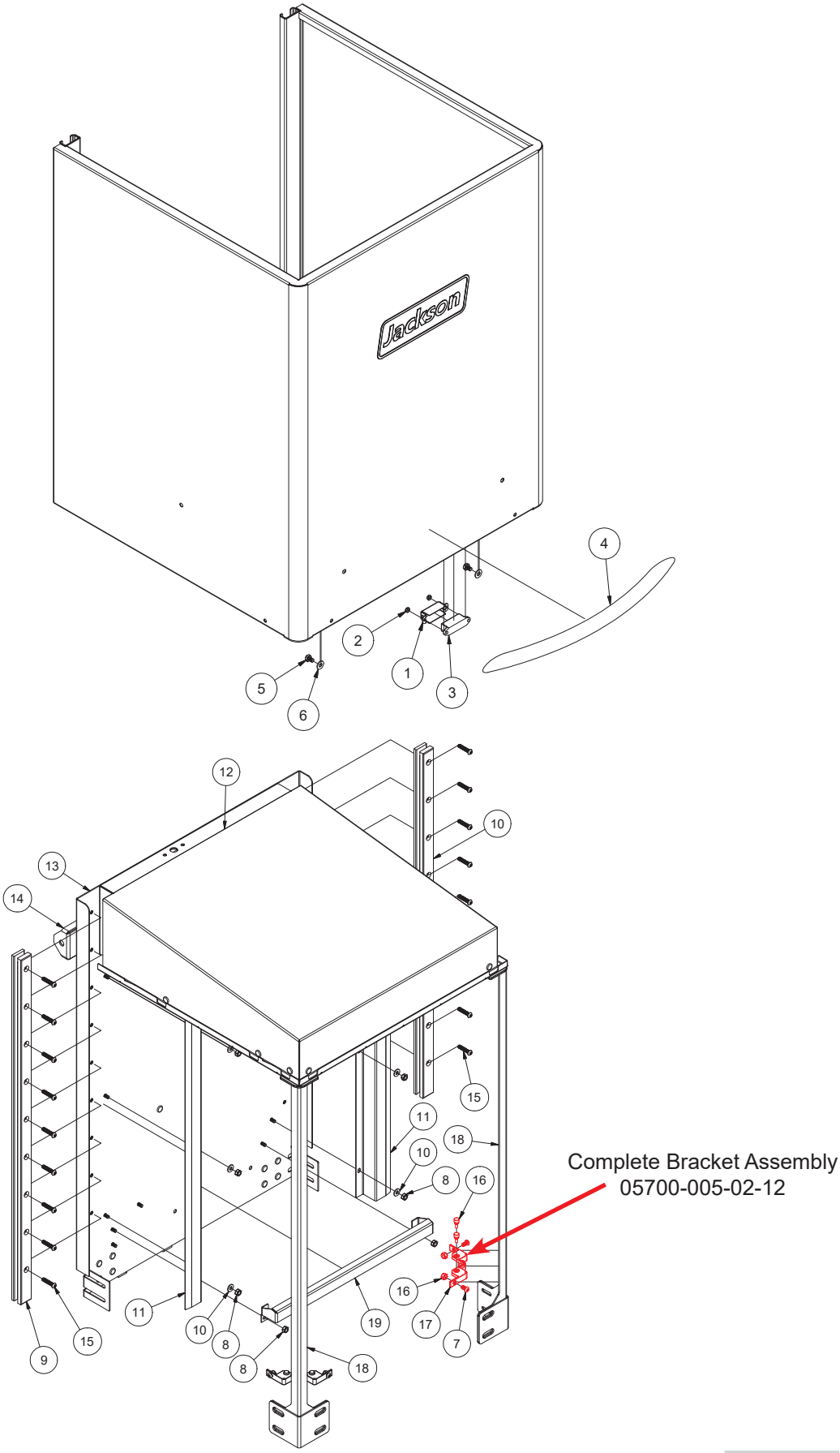
Jackson
1
2
3
4
5
6
7
8
9
10
11
12
13
14
15
16
17
18
19
Complete Bracket Assembly
05700-005-02-12

ITEM	QTY	DESCRIPTION	PART NUMBER
1	1	Cover, Door Magnet	96662062
2	2	Locknut, 6-32 Hex with Nylon Insert	05310-373-03-00
3	1	Door Magnet	05930-002-88-42
4	1	Door Handle	05700-003-26-62
5	2	Bolt, 1/4-20 x 3/8" Hex	05305-274-20-00
6	2	Washer, 1/4-20	05311-174-01-00
7	4	Screw, 1/4-20 x 1/2" Button Head Hex	05305-004-62-33
8	12	Locknut, 1/4-20 Hex with Nylon Insert	05310-374-01-00
9	2	Rail, Door Slide	09330-004-77-86
10	8	Washer, 1/4-20	05311-174-01-00
11	2	Cover, Door Track Rear Wall	05700-004-79-58
12	1	Hood Top	05700-004-78-46
13	1	Hood Back	05700-005-02-13
14	2	Bracket, Pivot	05700-004-91-66
15	18	Screw, 1/4-20 x 1 1/4" Button Head Hex	05305-005-01-94
16	4	Bumper, Door	05700-004-14-25
17	2	Bracket, Door Guide Front	05700-004-95-43
18	2	Corner Post	05700-004-94-99
19	1	Rack Guide, Rear	05700-005-00-07

DYNASTAR CANTILEVER ARM

Arm shown in raised position.

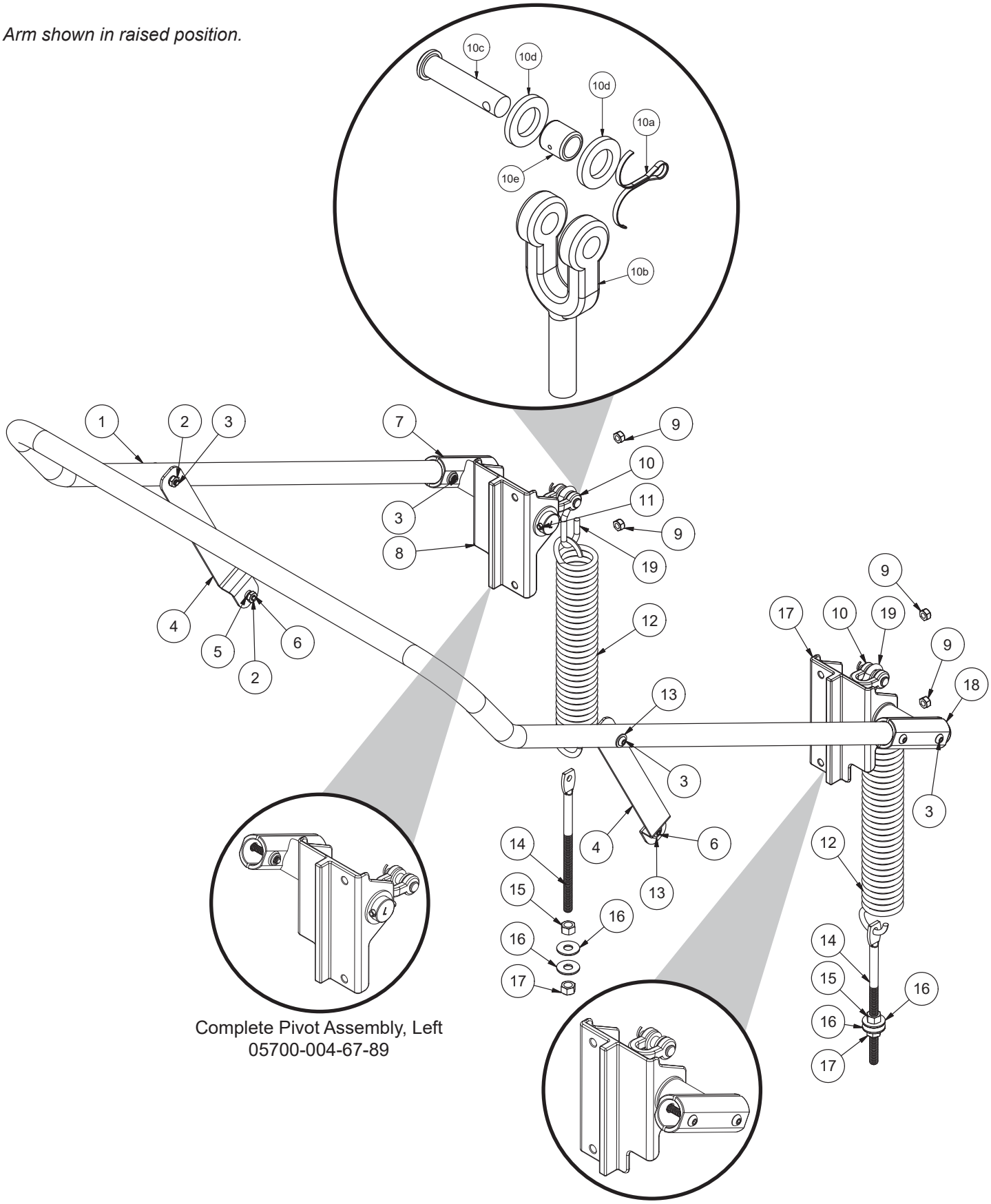

Complete Pivot Assembly, Left
05700-004-67-89

Complete Pivot Assembly, Right
05700-004-67-88

DYNASTAR CANTILEVER ARM

ITEM	QTY	DESCRIPTION	PART NUMBER
1	1	Cantilever Arm	05700-004-58-62
2	4	Locknut, 1/4-20 Low Profile with Nylon Insert	05310-374-02-00
3	8	Screw, 1/4-20 x 1 1/2" Button Head Hex	05305-004-66-43
4	2	Link, Hood to Handle	05700-004-58-64
5	2	Spacer, PB Bolt	05700-000-29-40
6	4	Screw, 1/4-20 x 1/2" Button Head Hex	05305-004-62-33
7	1	Pivot, Left	09515-004-58-53
8	1	Bracket, Door Pivot, Left	09515-004-59-98
9	4	Locknut, 1/4-20 Hex with Nylon Insert	05310-374-01-00
10	2	Complete Yoke Assembly	05700-000-75-77
10a	1 per	Cotter Pin	05315-207-01-00
10b	1 per	Yoke	05700-000-75-78
10c	1 per	Clevis Pin, 5/16” x 1 3/8”	05315-700-01-00
10d	2 per	Nylon Washer	05311-369-03-00
10e	1 per	Bushing	03120-100-03-00
11	2	Spring Pin, 1 1/4"	05315-407-06-00
12	2	Door Spring	05340-004-66-19
13	4	Washer, 1/4-20	05311-174-01-00
14	2	Bolt, Cantilever Hang Eye	05306-956-05-00
15	2	Nut, Hex 3/8-16	05310-276-01-00
16	4	Washer, Impeller 3/8" Flat SS	05311-176-02-00
17	2	Locknut, 3/8-16 with Nylon Insert	05310-011-72-55
18	1	Pivot, Right	09515-004-58-52
19	2	Spring Rod	05700-004-63-28

HH-E CANTILEVER ARM

Arm shown in raised position.

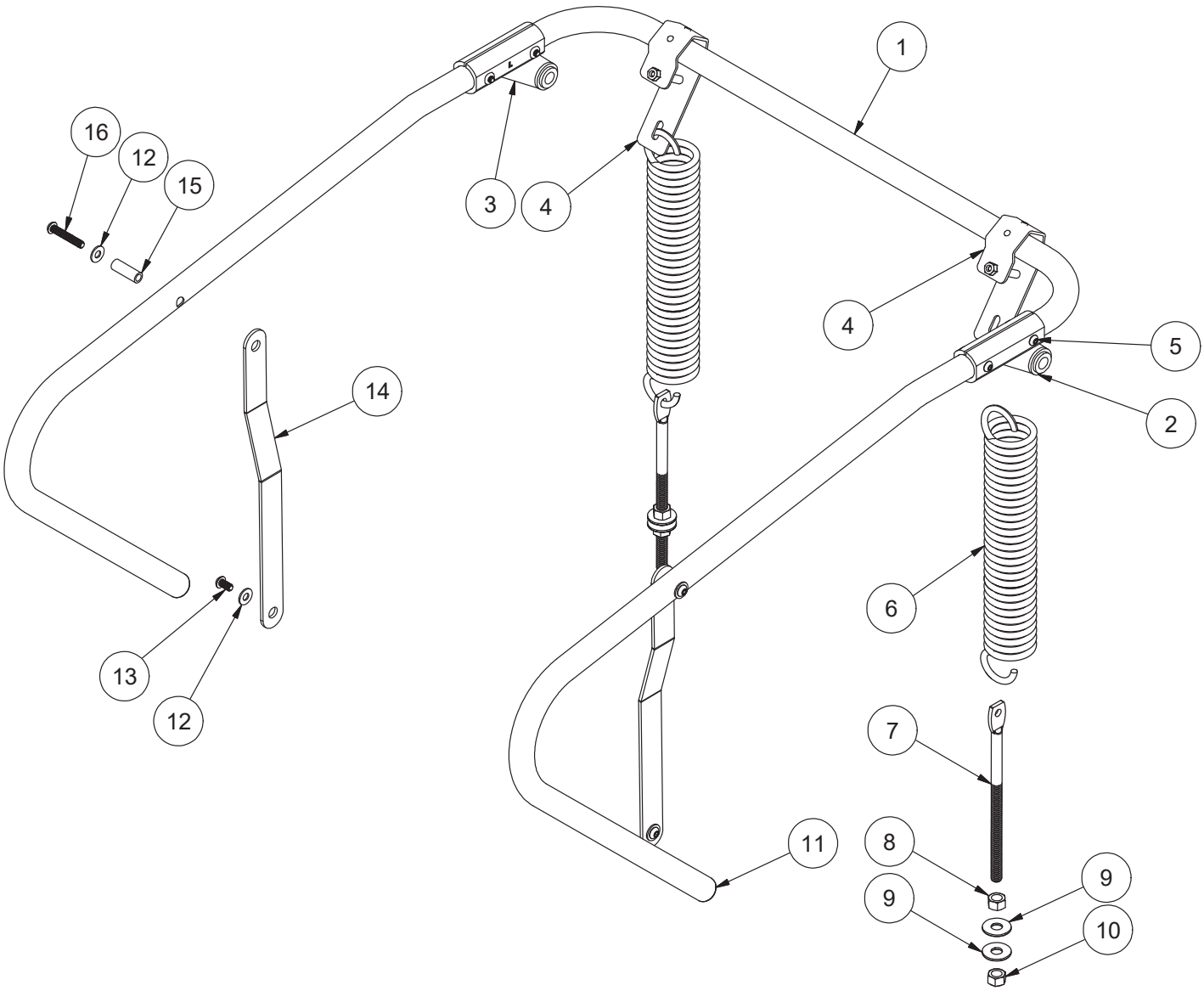

HH-E CANTILEVER ARM

ITEM	QTY	DESCRIPTION	PART NUMBER
1	1	Cantilever Arm	05700-004-75-56
2	1	Pivot, Cantilever Arm Right	05700-004-81-77
3	1	Pivot, Cantilever Arm Left	05700-004-81-78
4	2	Hook, Spring Cantilever	05700-004-83-02
5	4	Screw, 1/4-20 x 1 1/2" Button Head Hex	05305-004-66-43
6	2	Door Spring	05340-004-82-97
7	2	Bolt, Cantilever Hang Eye	05306-956-05-00
8	2	Nut, Hex 3/8-16	05310-276-01-00
9	4	Washer, Impeller 3/8" Flat	05311-176-02-00
10	2	Locknut, 3/8-16 with Nylon Insert	05310-011-72-55
11	2	Plug, Handle	96022447
12	4	Washer, 1/4-20	05311-174-01-00
13	4	Screw, 1/4-20 x 1/2" Button Head Hex	05305-004-62-33
14	2	Door Link	05700-004-78-61
15	2	Sleeve, Cantilever Arm	05700-000-85-69
16	2	Screw, 1/4-20 x 1 1/2" Button Head Hex	05305-004-66-43

DYNASTAR TUB

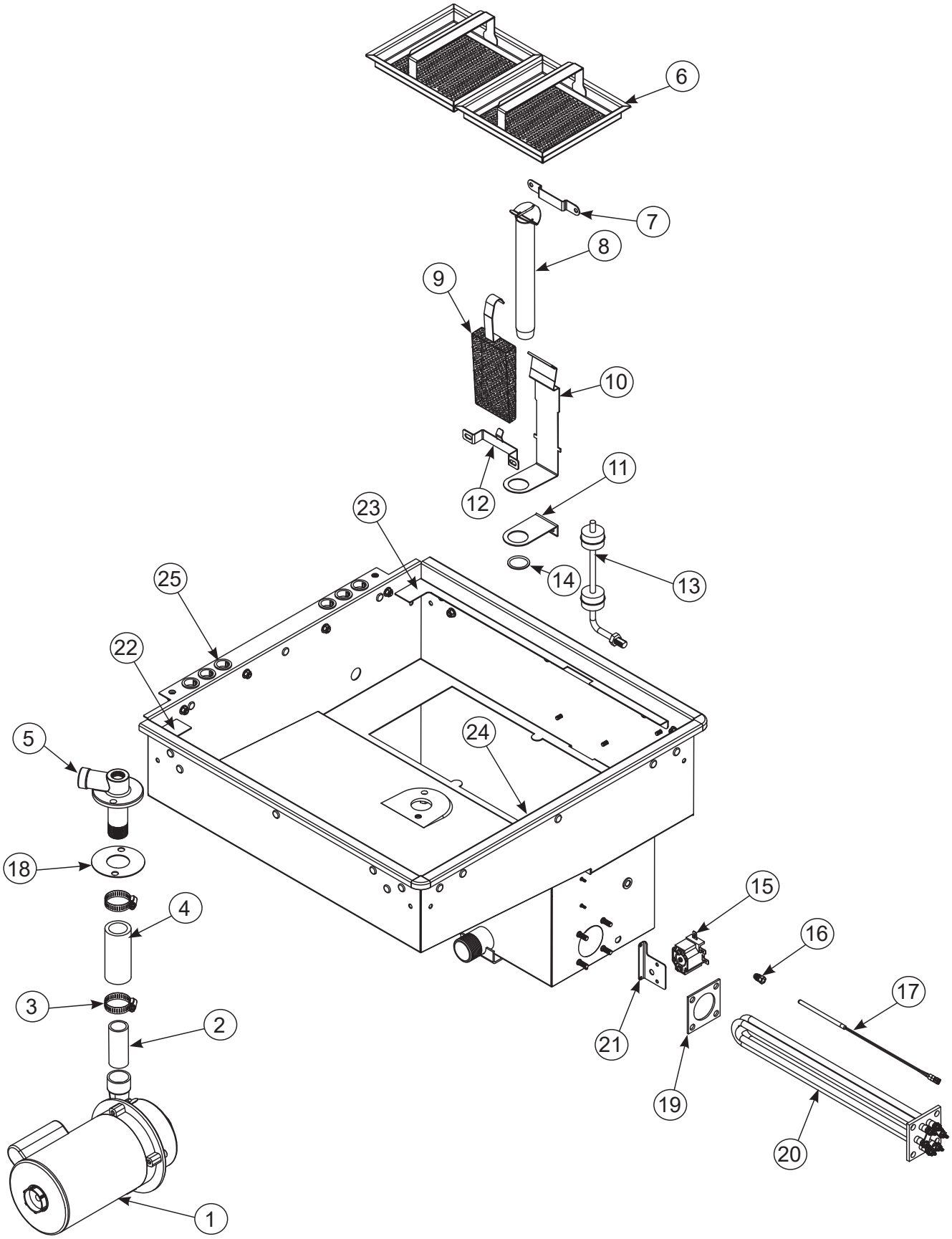

ITEM	QTY	DESCRIPTION	PART NUMBER
1	1	Wash Motor	See Wash Motors page.
2	1	Wash Lower Manifold Nipple	05700-021-34-84
3	2	Clamp	04730-719-18-00
4	1	Discharge Hose	05700-011-88-24
5	1	Lower Wash Manifold	09515-004-60-33
6	2	Strainer	05700-004-26-21
7	1	Standpipe Bracket	05700-004-26-24
8	1	Standpipe	05700-001-25-69
9	1	Suction Strainer	05700-001-22-23
10	1	Standpipe Lift Handle	05700-004-26-23
11	1	Standpipe Support	05700-001-27-55
12	1	Suction Strainer Bracket	05700-001-22-24
13	1	Dual Float Switch	06680-121-70-71
14	1	O-ring	05330-400-05-00
15	1	Thermostat	05930-004-33-12
16	1	Probe Fitting	05310-924-02-05
17	1 1	Thermistor Probe Plug (NB) (Not Shown)	06685-004-17-26 05700-004-47-32
18	1	Gasket, Manifold	05700-111-35-03
19	1	Wash Heater Gasket	05330-011-47-79
20	1	Wash Heater	See Heaters page.
21	1	Thermostat Bracket	05700-004-36-37
22	1	Door Stop, Left	05700-004-58-92
23	1	Door Stop, Right	05700-004-57-78
24	1	Door Stop, Front	05700-004-57-79
25	6	Bushing, Snap	05975-210-09-00

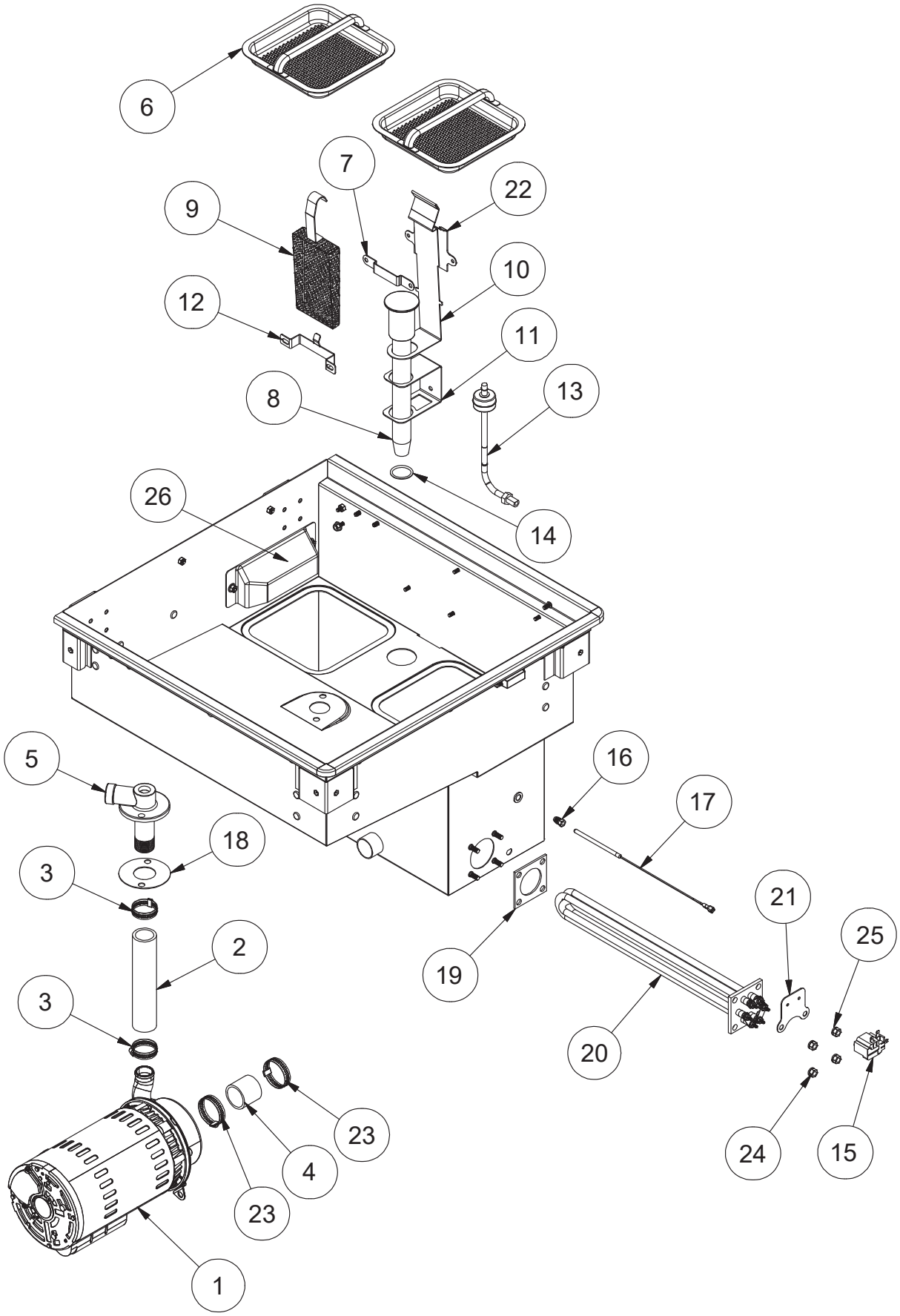
6
7
22
9
10
12
11
8
13
26
14
5
16
17
18
3
21
25
2
19
3
20
23
4
24
15
23
1

ITEM	QTY	DESCRIPTION	PART NUMBER
1	1	Wash Motor	See Wash Motors page.
2	1	Discharge Hose	05700-004-95-52
3	2	Clamp	04730-719-06-09
4	1	Hose, 1 1/2" x 1 5/8"	05700-004-84-18
5	1	Lower Wash Manifold	05700-002-21-70
6	2	Strainer	05700-004-84-14
7	1	Standpipe Bracket	05700-004-26-24
8	1	Standpipe	09515-004-99-59
9	1	Suction Strainer	05700-001-22-23
10	1	Standpipe Lift Handle	05700-004-78-62
11	1	Standpipe Support	05700-001-27-55
12	1	Suction Strainer Bracket	05700-001-22-24
13	1	Dual Float Switch	06680-121-70-71
14	1	O-ring	05330-400-05-00
15	1	Thermostat	05930-004-33-12
16	1	Probe Fitting	05310-924-02-05
17	1 1	Thermistor Probe Plug (NB) (Not Shown)	06685-004-17-26 05700-004-47-32
18	1	Gasket, Manifold	05700-111-35-03
19	1	Wash Heater Gasket	05330-011-47-79
20	1	Wash Heater	See Heaters page.
21	1	Thermostat Bracket	05700-004-66-08
22	1	Standpipe Lift Support	05700-004-27-94
23	2	Clamp	04730-719-18-00
24	4	Nut, Hex 5/16-18	05310-275-01-00
25	4	Lockwasher, Split 5/16"	05311-275-01-00
26	1	Detergent Inlet Cover	05700-004-99-86

DYNASTAR RACK RAIL

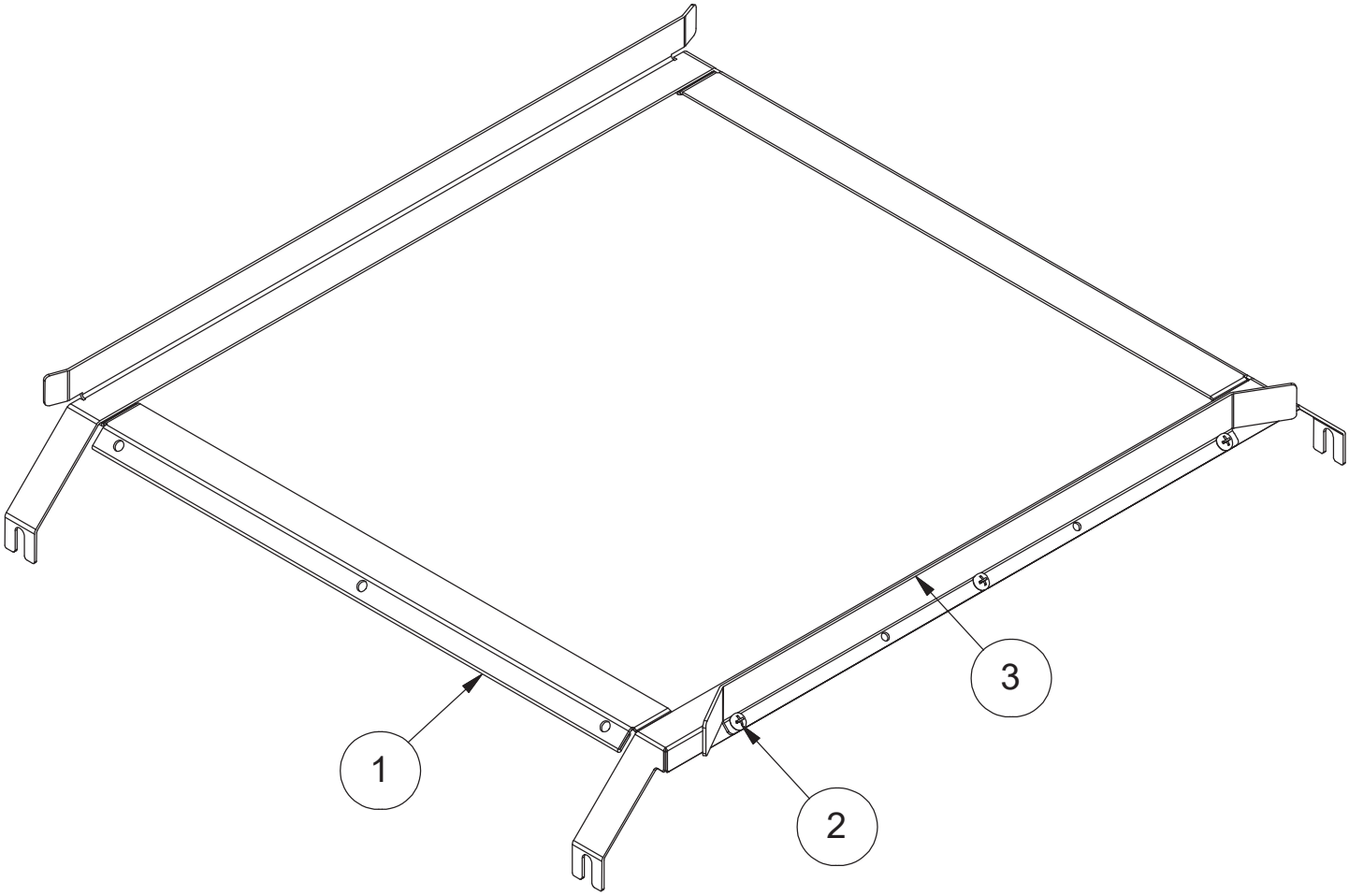

ITEM	QTY	DESCRIPTION	PART NUMBER
1	1	Rack Support	05700-004-58-69
2	1	Rack Guide	05700-001-28-19
3	3	Screw, 10-24 x 1/2"	05305-173-18-00

HH-E RACK RAIL

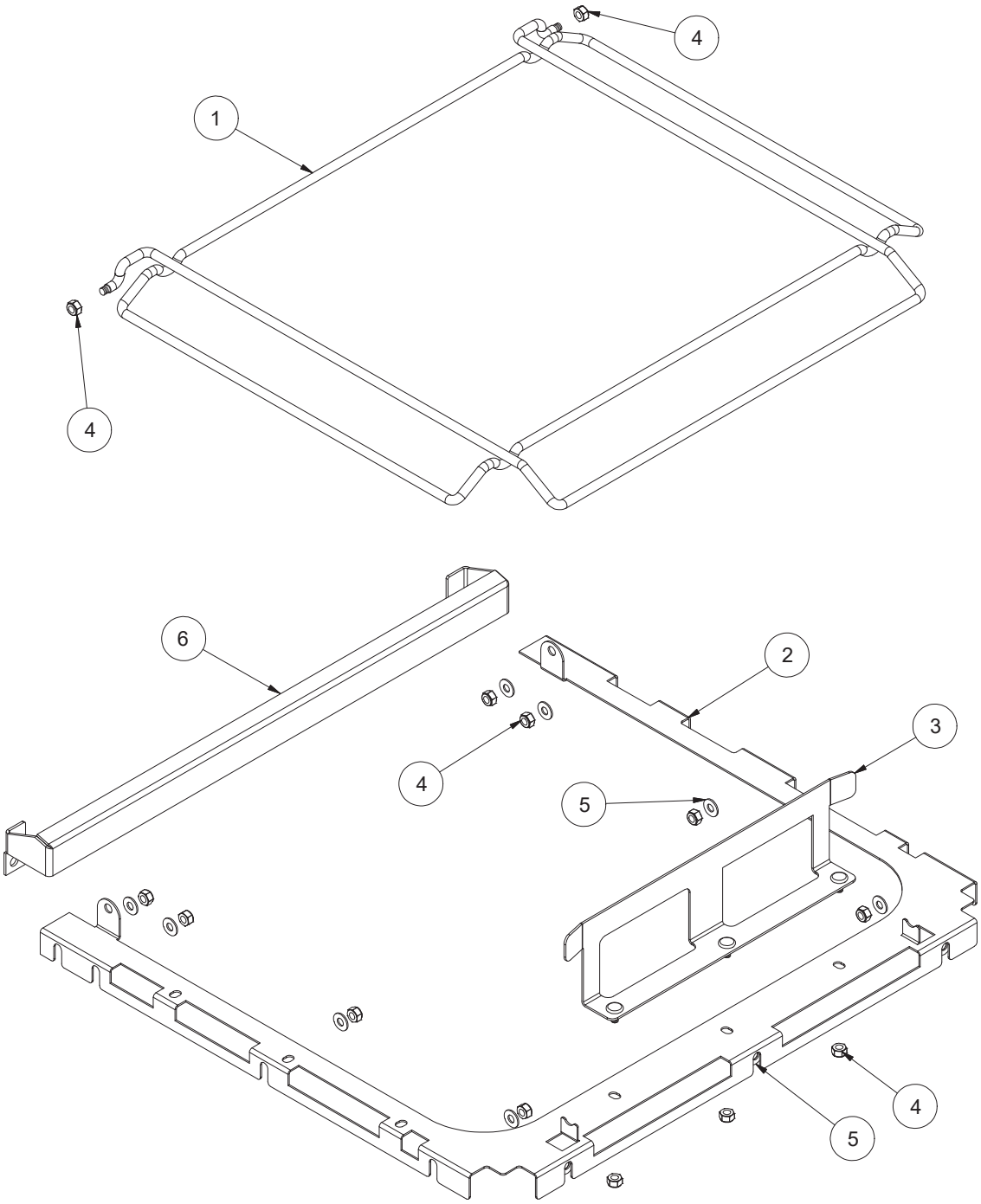

ITEM	QTY	DESCRIPTION	PART NUMBER
1	1	Rack Support	05700-004-95-04
2	1	Splash Shield	05700-004-94-44
3	1	Rack Guide, Front	05700-004-95-16
4	13	Locknut, 1/4-20 Hex with Nylon Insert	05310-374-01-00
5	11	Washer, 1/4-20	05311-174-01-00
6	1	Rack Guide, Rear	05700-005-00-07

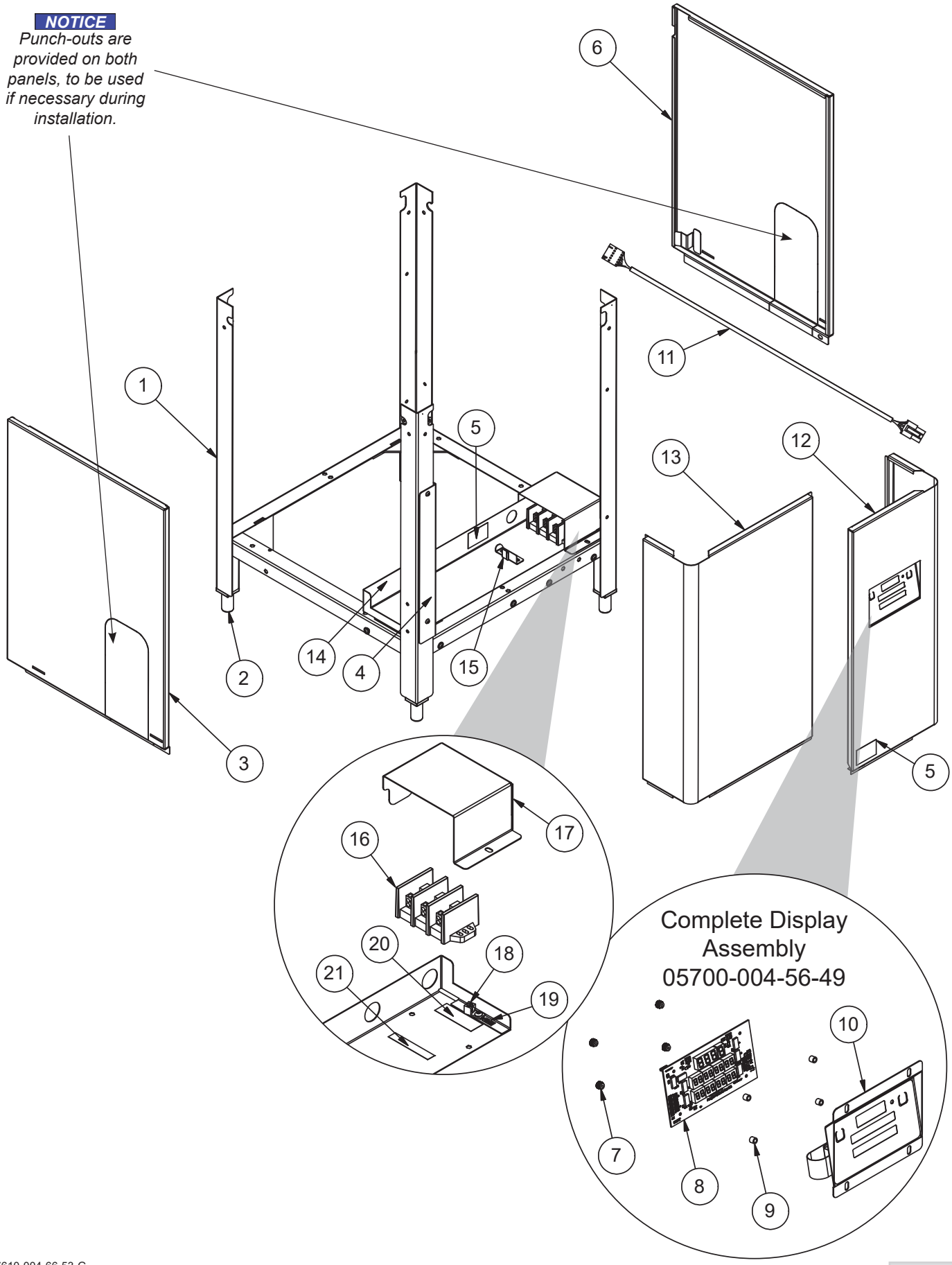
NOTICE
Punch-outs are provided on both panels, to be used if necessary during installation.
1
2
3
4
5
6
7
8
9
10
11
12
13
14
15
16
17
18
19
20
21
Complete Display Assembly
05700-004-56-49

FRAME

ITEM	QTY	DESCRIPTION	PART NUMBER
1	1	Frame	05700-004-60-61
2	4	Foot, Adjustable	05340-108-02-06
3	1	Panel, Left Panel, Left HH-E	05700-004-64-73 05700-004-84-68
4	1	Bracket, Control Panel Stop	05700-004-65-45
5	2	Decal, Warning-Disconnect Power	09905-100-75-93
6	1	Panel, Right Panel, Right HH-E	05700-004-64-74 05700-004-84-69
7	4	Nut, Thumb, 6-32 Nylon	05310-002-83-12
8	1	PCB, Digital Display	05945-004-52-53
9	4	Spacer, Unthreaded, 9/32" Nylon	05975-004-47-89
10	1	Panel and Membrane Switch Assembly	05700-004-58-72
11	1	Communication Cable, Display	05700-004-33-64
12	1	Panel, Front	05700-004-66-47
13	1	Panel, Front Left	05700-004-57-93
14	1	Shield, Control Panel	05700-004-60-62
15	1	Bracket, Lock	05700-004-68-47
16	1	Terminal Block, 3-pole	05940-011-48-27
17	1	Cover, Terminal Block	05700-004-69-49
18	1	Lug, Ground	05940-200-76-00
19	1	Decal, Ground	09905-011-86-86
20	1	Decal, Copper Conductors	09905-011-47-35
21	1	Decal, L1 L2 L3 (Wild Leg)	09905-004-37-05

DYNASTAR WASH & RINSE ARMS

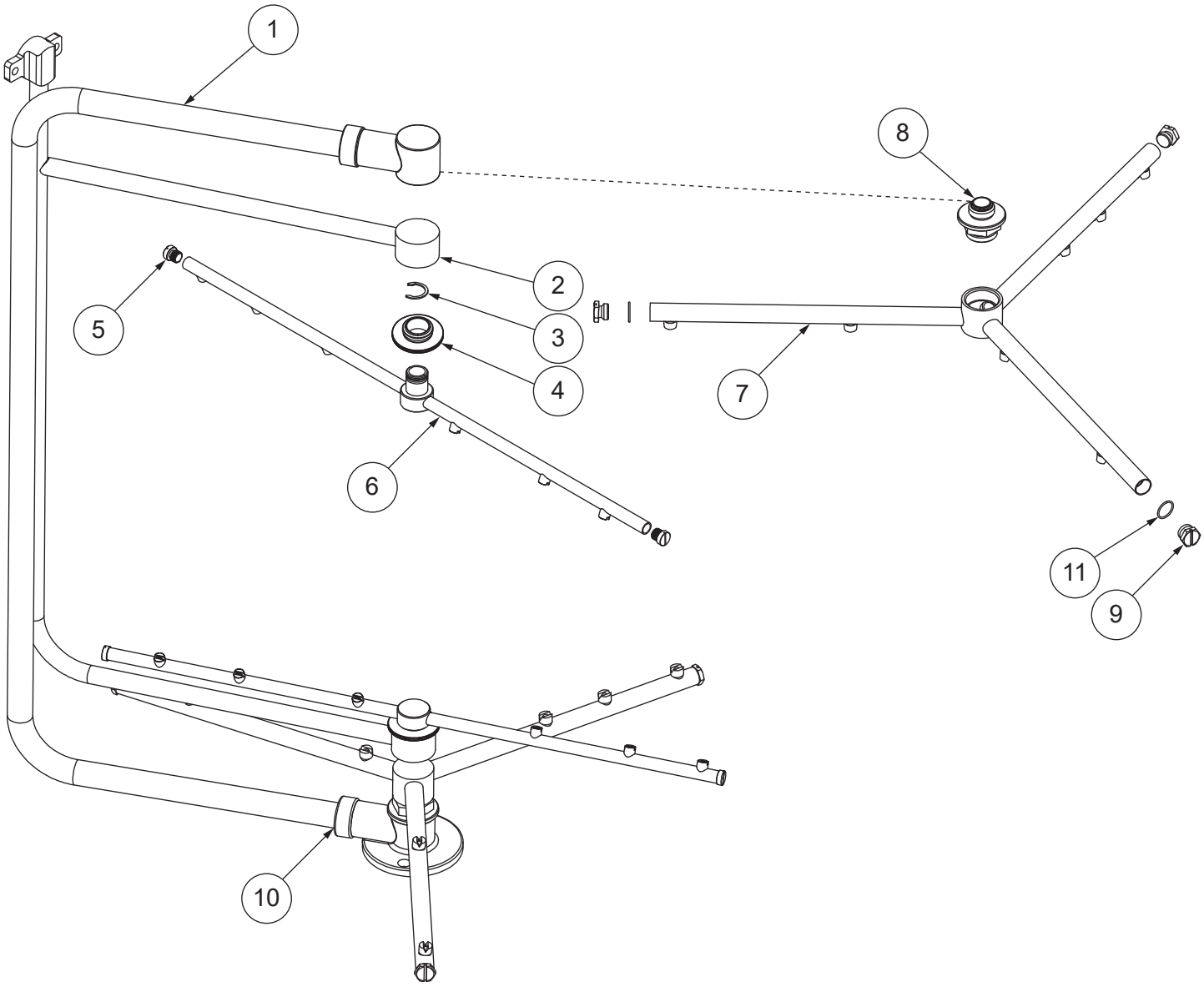

DYNASTAR WASH & RINSE ARMS

ITEM	QTY	DESCRIPTION	PART NUMBER
1	1	Wash Manifold	05700-004-57-86
2	1	Rinse Manifold	05700-004-57-83
3*	2	Retaining Ring, Rinse Head Bushing	05340-112-01-11
4*	2	Bearing Assembly, Rinse Arm	05700-004-54-71
5	4	End-cap, Rinse Arm	05700-004-34-62
6	2	Complete Rinse Arm Assembly	05700-004-32-58
		Rinse Arm	05700-004-27-62
7	2	Complete Wash Arm Assembly	05700-004-32-59
		Wash Arm	05700-004-24-81
8	2	Bearing Assembly, Wash Arm	05700-021-35-97
9	1	End-cap, Wash Arm	05700-011-35-92
10	1	O-ring, Manifold (Not Shown)	05330-111-35-15
11	6	O-ring, Wash Arm End-cap	05330-005-03-37

*Rinse Arm Bearing Kit
(Includes items 3 and 4)
06401-004-57-50

HH-E WASH & RINSE ARMS

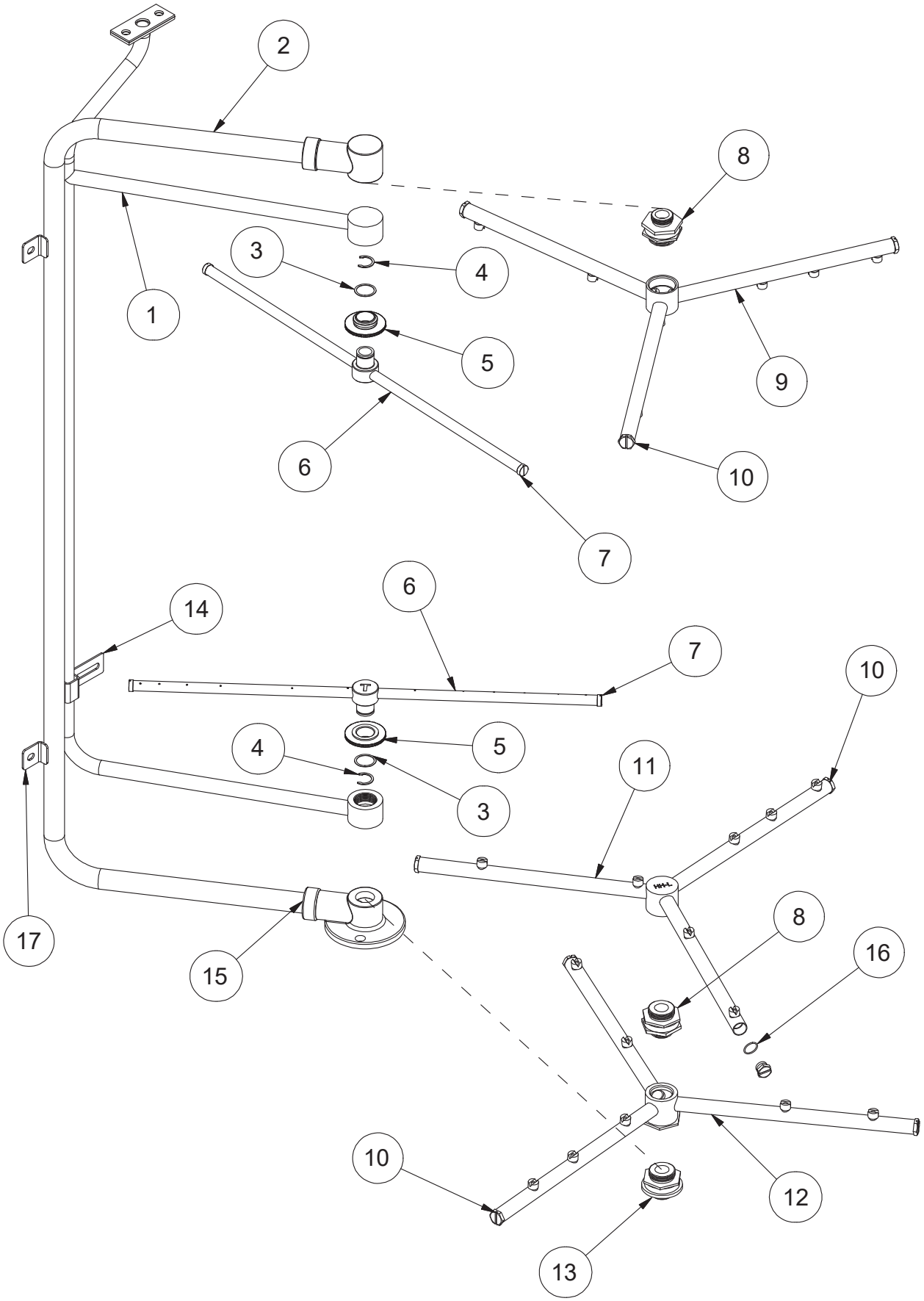

HH-E WASH & RINSE ARMS

ITEM	QTY	DESCRIPTION	PART NUMBER
1	1	Rinse Manifold	05700-004-72-17
2	1	Wash Manifold	05700-004-72-12
3	2	Washer, Rinse Hub	05311-004-71-42
4	2	Retaining Ring, Rinse Head Bushing	05340-112-01-11
5	2	Bearing Assembly, Rinse Arm	05700-004-54-71
6	2	Rinse Arm	05700-031-49-58
7	4	End-cap, Rinse Arm	04730-111-60-41
8	2	Bearing Assembly, Wash Arm	05700-003-93-98
9	1	Wash Arm, Top	05700-004-78-57
10	9	End-cap, Wash Arm	05700-011-35-92
11	1	Wash Arm, Bottom A	05700-004-97-90
12	1	Wash Arm, Bottom B	05700-004-78-58
13	1	Bearing Assembly, Wash Arm	05700-003-93-99
14	1	Bracket, Rinse Manifold	05700-005-02-86
15	1	O-ring, Manifold (Not Shown)	05330-111-35-15
16	9	O-ring, Wash Arm End-cap	05330-005-03-37
17	2	Bracket, Manifold	05700-004-58-88

Complete Rinse Arm Assembly
(Includes items 8–10)
05700-004-83-82

Complete Wash Arm Assembly, Top
(Includes items 3–7)
05700-004-83-84

Complete Wash Arm Assembly, Bottom Double
(Includes items 8 and 10–13)
05700-004-83-83

DYNASTAR RINSE TANK

Complete Rinse Tank Assembly
208-230 V, 70˚ Rise
05700-005-00-10

NOTICE
*Machines before 22D405278 have a different rinse tank. Click **here** to open earlier manual.*

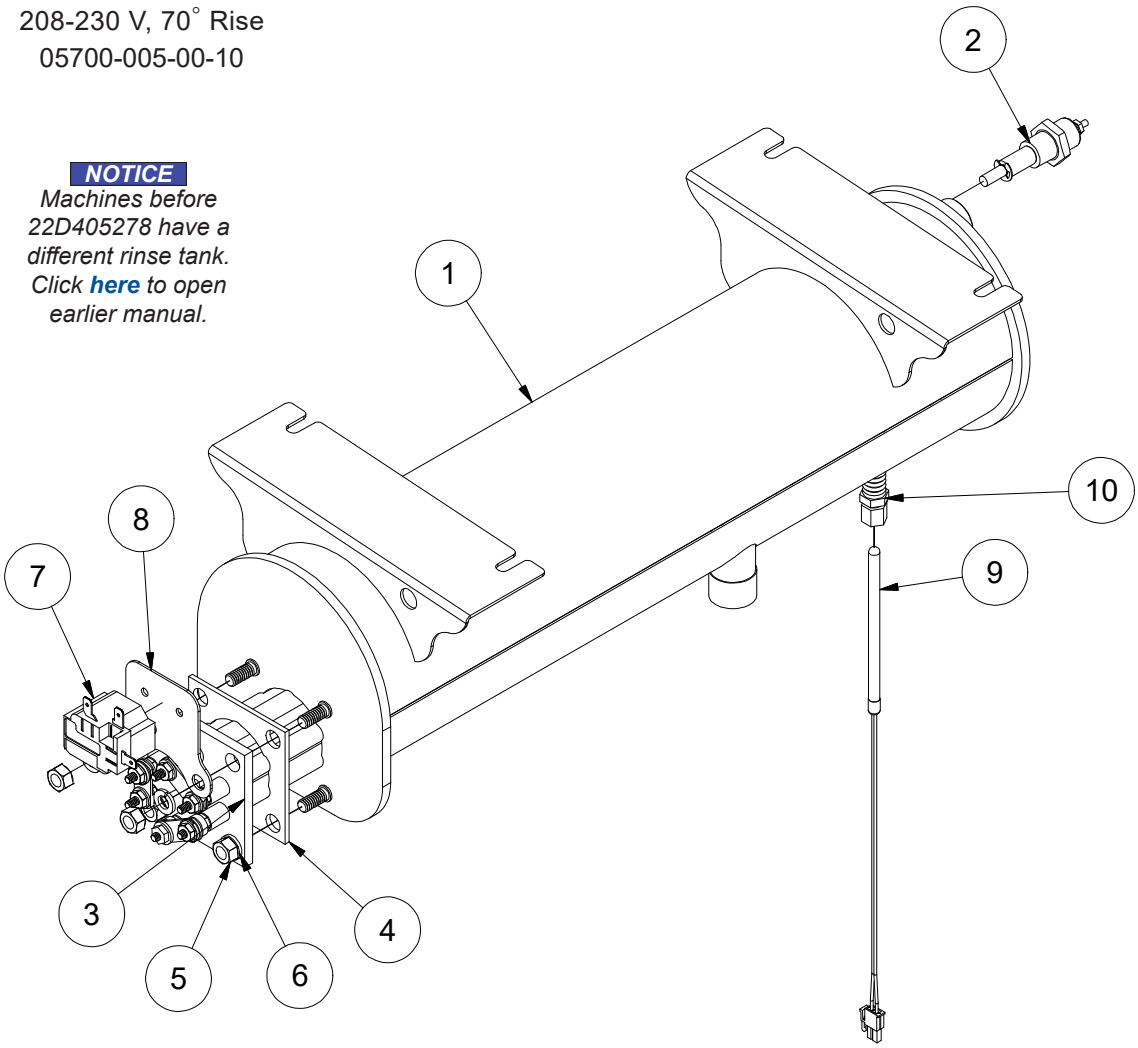

ITEM	QTY	DESCRIPTION	PART NUMBER
1	1	Tank, Rinse	05700-004-99-62
2	1	Probe, High-water	06680-200-02-68
3	1	Heater, Rinse	See Heaters page.
4	1	Gasket, Heater	05330-011-47-79
5	4	Nut, Hex 5/16-18	05310-275-01-00
6	4	Lockwasher, Split 5/16”	05311-275-01-00
7	1	Thermostat, High-limit	05930-004-33-12
8	1	Bracket, High-limit	05700-004-66-08
9	1	Thermistor Probe	06685-004-34-58
10	1	Union, 1/4"	05700-001-16-52

HH-E RINSE TANK

Complete Rinse Tank Assembly
208-230 V, 70˚ Rise
05700-005-00-10

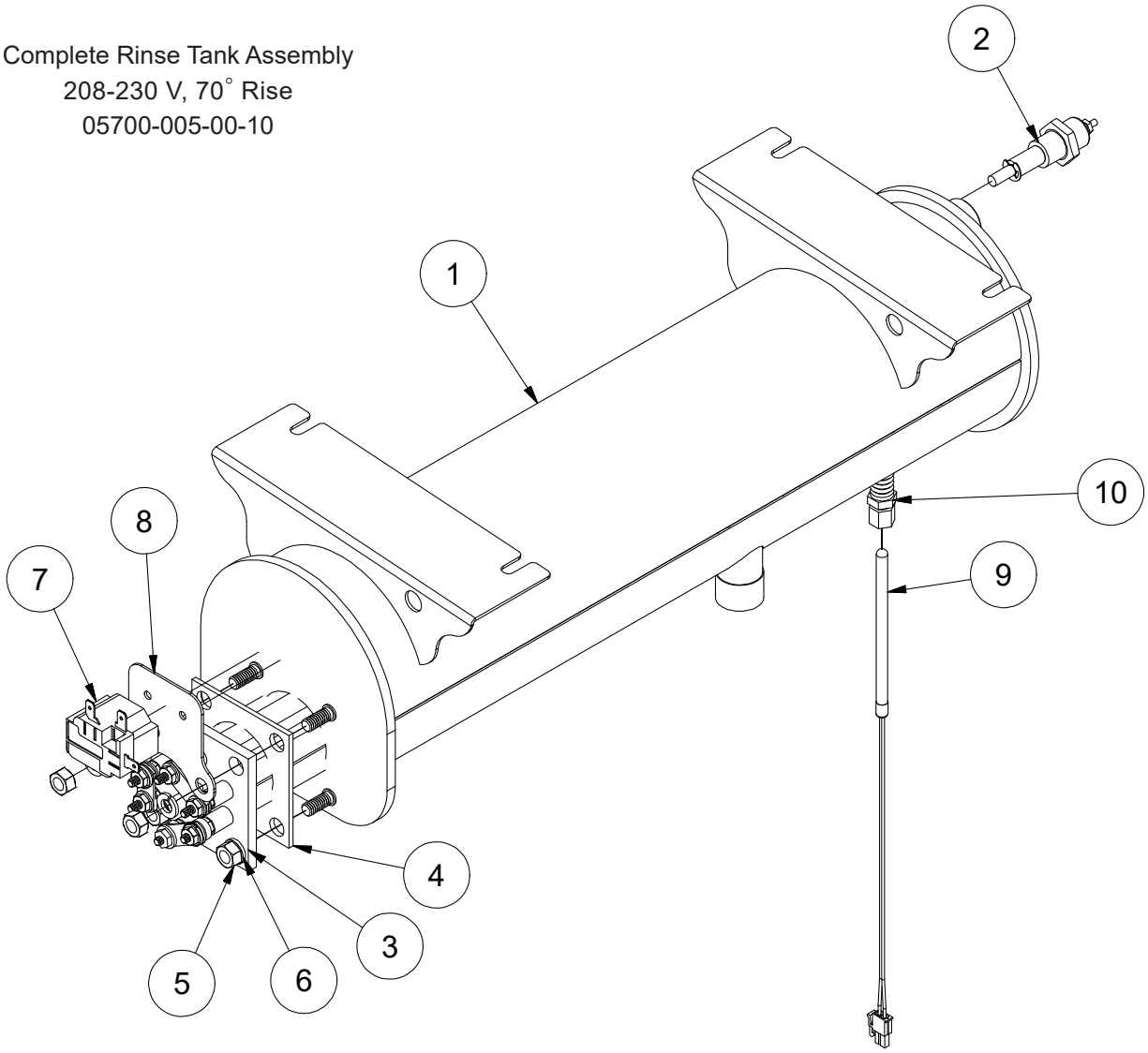

ITEM	QTY	DESCRIPTION	PART NUMBER
1	1	Tank, Rinse	05700-004-99-62
2	1	High Water Probe	06680-200-02-68
3	1	Heater, Rinse	See Heaters page.
4	1	Gasket, Heater	05330-011-47-79
5	4	Nut, Hex 5/16-18	05310-275-01-00
6	4	Lockwasher, Split 5/16”	05311-275-01-00
7	1	Thermostat, High-limit	05930-004-33-12
8	1	Bracket, High-limit	05700-004-66-08
9	1	Thermistor Probe	06685-004-34-58
10	1	Union, 1/4"	05700-001-16-52

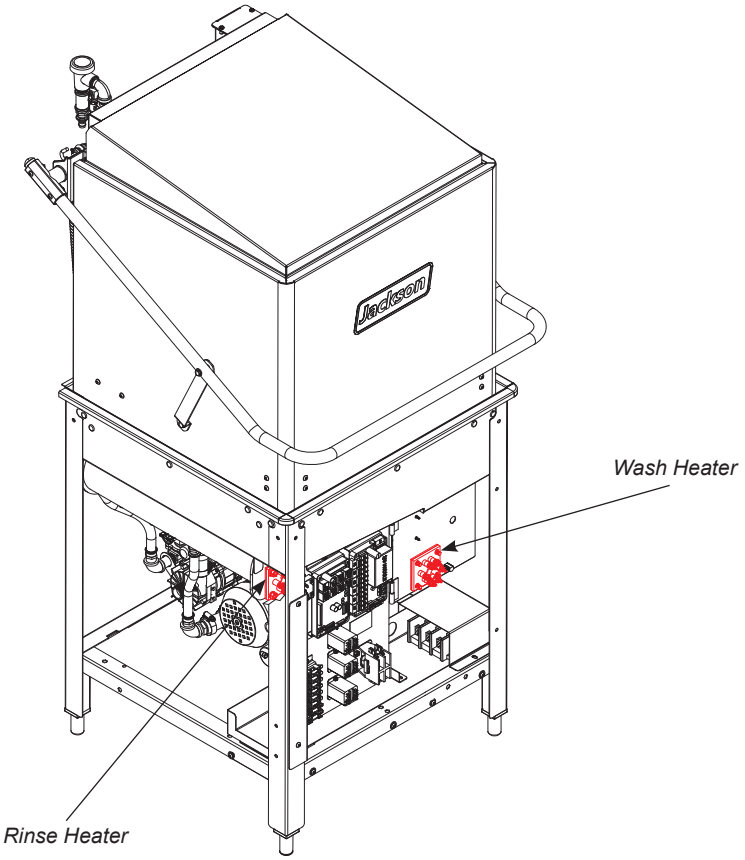

The models covered in this manual come supplied with various heaters, depending on the characteristics of the machine. To ensure you order the correct heater for the model you are servicing, please refer to the following tables:

MODEL	VOLTS	Hz	PHASE	WASH HEATER	RINSE HEATER
All Models except NB	208	60	1	04540-121-47-39	04540-004-75-04
All Models except NB	208	60	3	04540-121-47-39	04540-004-75-04
All Models except NB	230	60	1	04540-121-47-39	04540-004-75-04
All Models except NB	230	60	3	04540-121-47-39	04540-004-75-04
All Models except NB	460	60	3	04540-121-65-99	04540-002-29-82

MODEL	VOLTS	Hz	PHASE	WASH HEATER
NB Models	208	60	1	04540-121-47-39
NB Models	208	60	3	04540-121-47-39
NB Models	230	60	1	04540-121-47-39
NB Models	230	60	3	04540-121-47-39
NB Models	460	60	3	04540-121-65-99

Heater Phase Conversion Kit

06401-004-00-22

Complete Assemblies

(See next page for parts.)

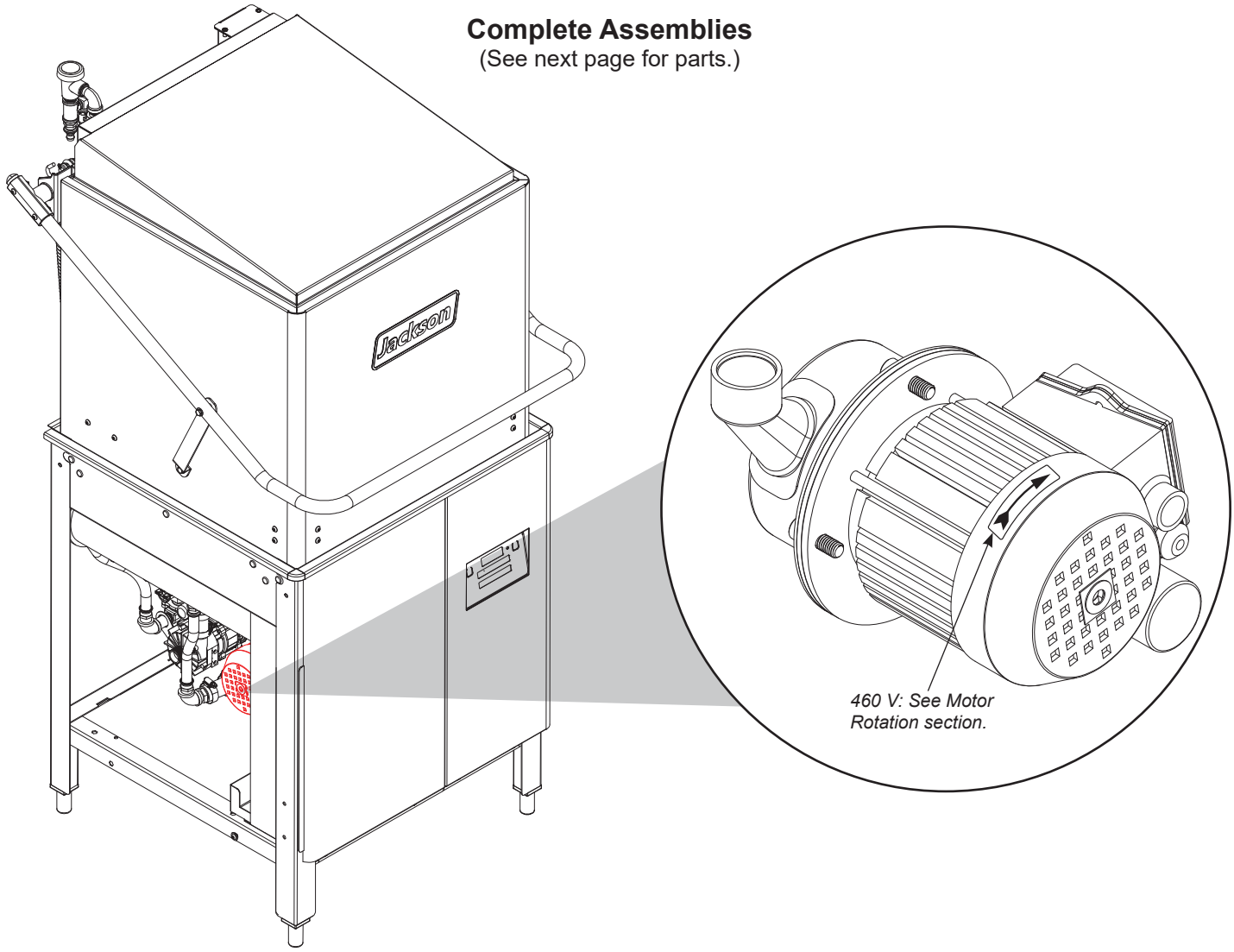

The models covered in this manual come supplied with various wash motor assemblies (a wash motor assembly includes the wash motor and the pump end), depending on the characteristics of the machine. To ensure you order the correct wash motor assembly for the model you are servicing, please refer to the following table:

MODEL	VOLTS	Hz	PHASE	WASH MOTOR ASSEMBLY
DynaStar Series	208/230	60	1/3	06105-004-24-80[1]
DynaStar Series	460	60	3	06105-121-64-21[2]

[1]Use P/N 06105-004-32-04 to order the motor only.
[2]Use P/N 06105-002-62-71 to order the motor only.

MODEL	VOLTS	Hz	PHASE	WASH MOTOR ASSEMBLY
DynaStar HH-E Series	208/230	60	1/3	06105-004-85-94
DynaStar HH-E Series	460	60	3	06105-004-85-95

NOTICE

When servicing a wash motor, it is important to refer to the wiring schematic found on the motor to ensure the motor is wired correctly. Different manufacturers of motors might not use the same wire color codes and your new motor might not connect using the same wires. Always refer to the wiring diagrams on the motor you are installing. If the motor you are installing has had the schematic removed, contact the manufacturer immediately for technical support.

Parts

(See previous page for complete assemblies.)

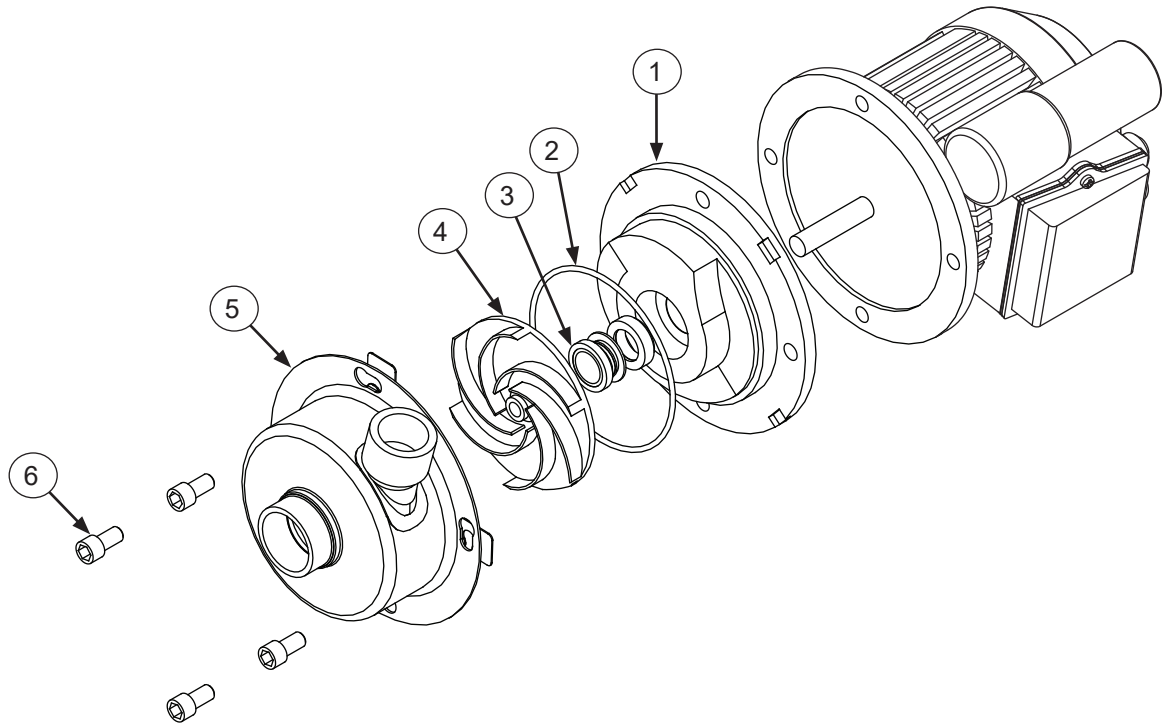

The models covered in this manual come supplied with various wash motors (see previous page), depending on the characteristics of the machine. To ensure you order the correct parts for the model you are servicing, please refer to the following table:

ITEM	QTY	DESCRIPTION	PART NUMBER
1	1	Seal Plate, 208/230 V	05700-002-81-87
	1	Seal Plate, 460 V	05700-002-06-22
2	1	Case O-ring, 208/230 V	05330-002-81-83
	1	Case O-ring, 460 V	05330-002-87-02
3	1	Mechanical Seal, 208/230 V	05330-002-34-22
	1	Mechanical Seal, 460 V	05330-002-87-16
4	1	Impeller Assembly, 208/230 V	05700-002-81-86
	1	Impeller Assembly, 460 V	05700-002-06-19
5	1	Pump Casing 208/230 V	05700-002-85-01
	1	Pump Casing 460 V	05700-002-06-20
6	1	Case Capscrew, 208/230 V	05305-002-81-88

DYNASTAR PLUMBING

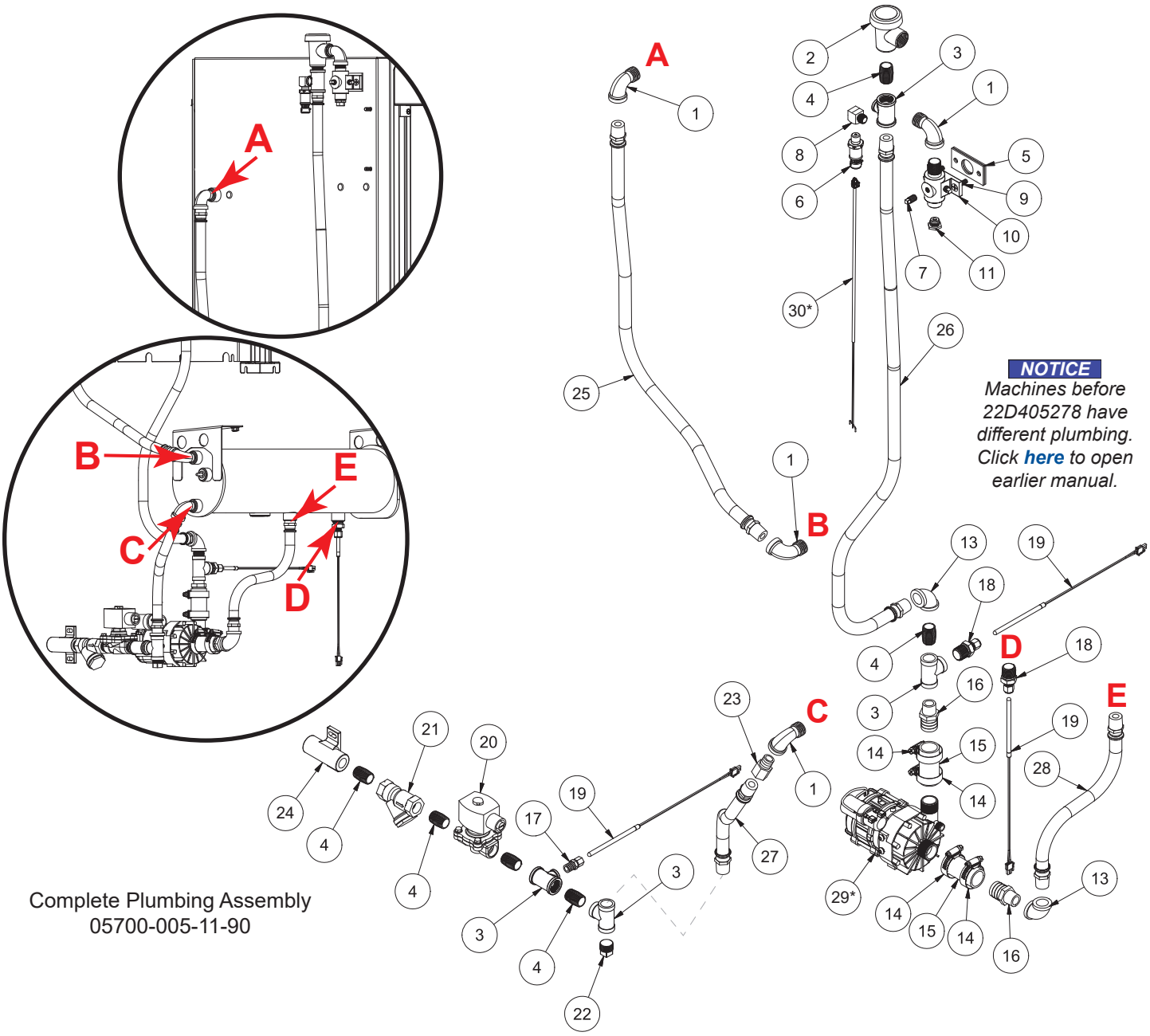

Complete Plumbing Assembly
05700-005-11-90

To order complete assemblies:

Inlet Plumbing	Vacuum Breaker Plumbing	Rinse Pump Outlet Plumbing
05700-004-99-81	05700-004-65-63	05700-004-66-83

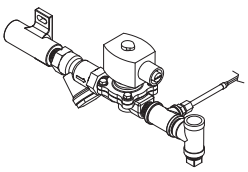

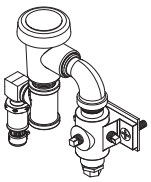

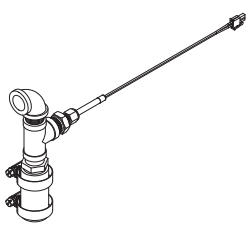

*Part must be ordered separately.

DYNASTAR PLUMBING

ITEM	QTY	DESCRIPTION	PART NUMBER
1	5	Elbow, 90-Degree 1/2" Street Brass	04730-206-08-00
2	1	Vacuum Breaker, 1/2" Brass	04820-003-06-13
3	3	Tee	04730-002-22-56
4	5	Nipple, 1/2" Close Brass	04730-207-15-00
5	2	Gasket, Rinse Manifold	05330-003-75-91
6	1	Pressure Transducer	05945-004-17-01
7	3	Plug, 1/8" NPT Brass	04730-209-07-37
8	1	Elbow, 90-Degree 1/4" x 1/4"	86075017
9	2	Screw, 1/4-20 x 1"	05305-011-81-58
10	1	Injector, Rinse Manifold	09515-004-22-73
11	1	Adapter	05700-002-29-75
12	1	Fitting, Thermostat Brass	05700-011-73-73
13	2	Elbow, 90-Degree 1/2" Brass	04730-011-42-96
14	4	Clamp, Hose, 13/16" x 1 1/2"	04730-719-06-09
15	2	Hose, Black, 1" ID, 1 1/2" Long	05700-004-68-24
16	2	Fitting, 1" x 1/2" Brass	04730-004-68-25
17	1	Union, 1/4" Modified	05700-001-16-52
18	2	Probe Fitting	04730-004-71-72
19	2	Fast-acting Probe	06685-004-75-99
20	1	Solenoid Valve, 1/2"	04810-003-71-56
21	1	Y-strainer, 1/2"	04730-217-01-10
22	1	Union, 1/2" x 1/2" Brass	04730-003-62-44
23	1	Flow Limiter, 1/2"	04730-004-67-76
24	1	Casting, 1/2" Flanged Coupling	05700-004-47-97
25	1	Hose, 1/2" Red	05700-005-03-71
26	1	Hose, 1/2" Red	05700-004-66-89
27	1	Hose, 1/2" Blue	05700-005-03-67
28	1	Hose, 1/2" Red	05700-004-67-85
29*	1	Rinse Pump	05700-004-67-91
30*	1	Harness Cable, Braided (Not Shown)	05700-004-33-62 05700-004-33-59

NOTICE

*Machines before 22D405278 have different plumbing. Click **here** to open earlier manual.*

HH-E PLUMBING

Complete Plumbing Assembly
05700-005-02-28

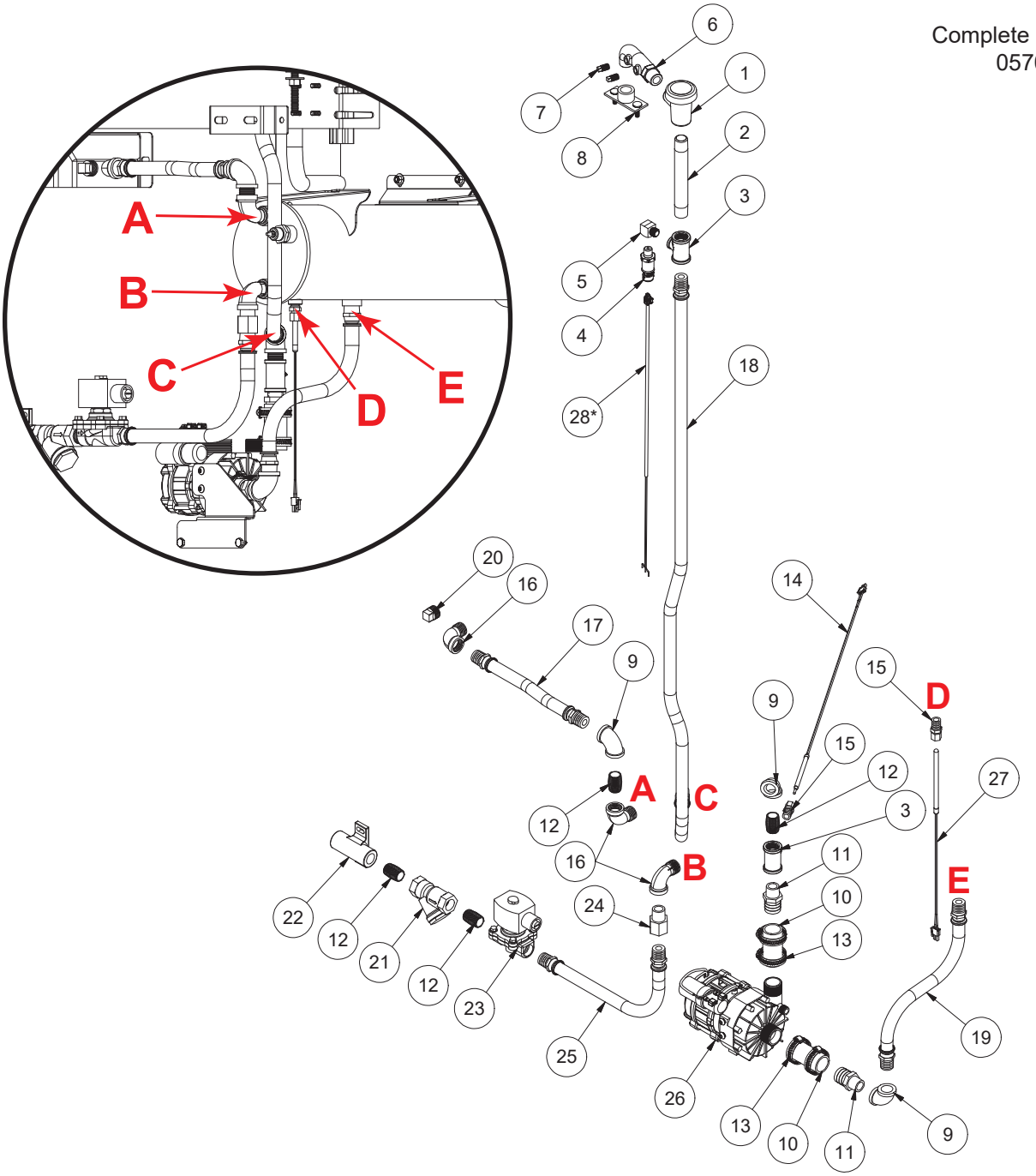

To order complete assemblies:

Inlet Plumbing 05700-005-02-29	Tank Fill Plumbing 05700-005-00-13	Rinse Manifold Plumbing 05700-004-84-19	Rinse Pump Outlet Plumbing 05700-004-66-83	Rinse Pump Plumbing 05700-004-67-86
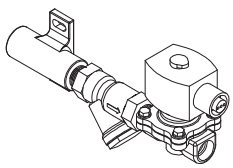	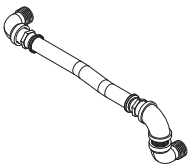	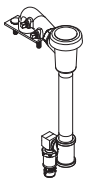	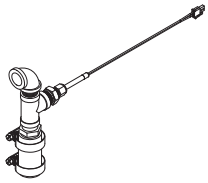	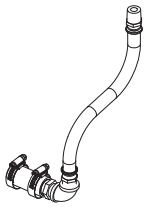

**Part must be ordered separately.*

HH-E PLUMBING

ITEM	QTY	DESCRIPTION	PART NUMBER
1	1	Vacuum Breaker, 1/2" Brass	04820-003-06-13
2	1	Nipple, 1/2" x 6" Brass	04730-003-62-38
3	2	Tee	04730-002-22-56
4	1	Pressure Transducer	05945-004-17-01
5	1	Elbow, 90-Degree 1/4" x 1/4"	04730-003-77-83
6	1	Rinse Injector	09515-004-94-21
7	2	Plug, 1/8" NPT Brass	04730-209-07-37
8	1	Injector Plate	05700-002-04-71
9	3	Elbow, 90-Degree 1/2" Brass	04730-011-42-96
10	2	Hose, Black, 1" ID, 1 1/2" Long	05700-004-68-24
11	2	Fitting, 1" x 1/2" Brass	04730-004-68-25
12	4	Nipple, 1/2" Close Brass	04730-207-15-00
13	4	Clamp, 13/16" x 1 1/2"	04730-719-06-09
14	1	Fast-acting Probe	06685-004-75-99
15	1	Union, 1/4" Modified	05700-001-16-52
16	3	Elbow, 90-Degree 1/2" Street Brass	04730-206-08-00
17	1	Hose, 1/2" x 5"	05700-005-00-14
18	1	Hose, 1/2" x 48 1/2"	05700-005-00-27
19	1	Hose, 1/2" x 10"	05700-004-67-84
20	2	Plug, 1/2"	04730-209-03-00
21	1	Y-strainer, 1/2"	04730-217-01-10
22	1	Coupling, 1/2"	05700-004-47-97
23	1	Solenoid Valve, 1/2"	04810-003-71-56
24	1	Flow Limiter, 1/2"	04730-004-67-76
25	1	Hose, Booster Inlet, 1/2"	05700-005-02-30
26*	1	Rinse Pump	05700-004-67-91
27	1	Thermistor Probe	06685-004-34-58
28*	1	Harness Cable, Braided (Not Shown)	05700-004-33-62 05700-004-33-59

NOTICE

When servicing plumbing components, take care not to damage the threads of each individual item. Damaged threads can cause leaks and loss of pressure, which could adversely affect the performance of the DynaStar machine. It is strongly recommended that teflon thread tape—used in conservative amounts—be applied to threads when joining components together. It is not advised to use thread sealing compounds, sometimes referred to as "pipe dope." Compounds can be ejected from the threads during the tightening process and become lodged in key components, rendering them useless, including solenoid valves and pressure gauge isolation ball valves.

DYNASTAR NB PLUMBING

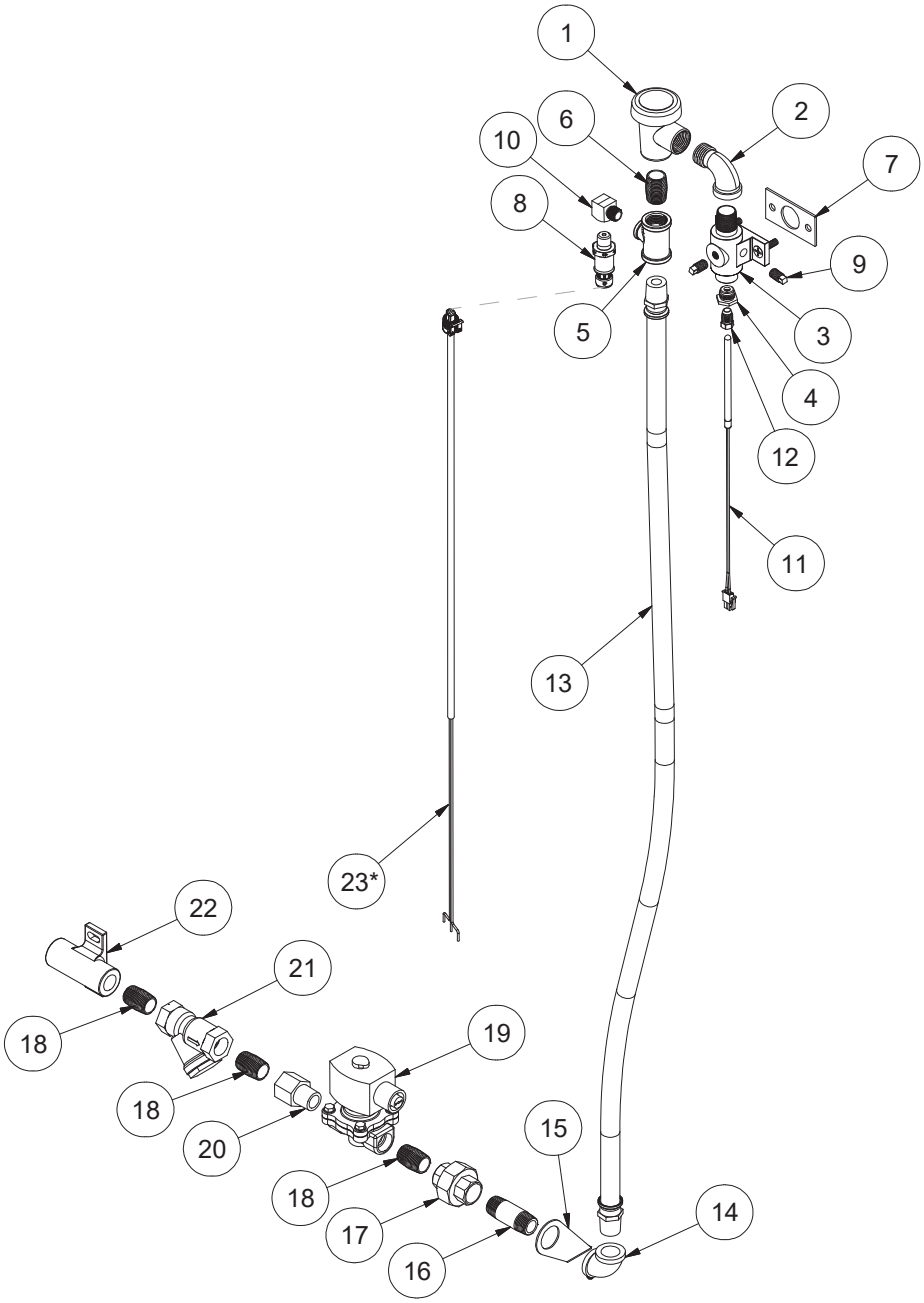

To order complete assemblies:

Rinse Injector Plumbing
05700-004-46-48

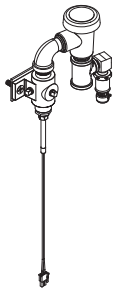

Inlet Plumbing
05700-004-62-60

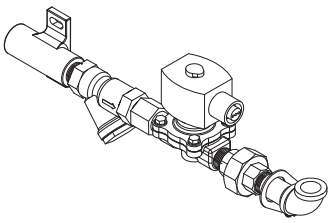

DYNASTAR NB PLUMBING

ITEM	QTY	DESCRIPTION	PART NUMBER
1	1	Vacuum Breaker, 1/2" Brass	04820-003-06-13
2	1	Elbow, 90-Degree 1/2" Street Brass	04730-206-08-00
3	1	Injector, Rinse Manifold	05700-004-26-98
4	1	Adapter	05700-002-29-75
5	1	Tee	04730-002-22-56
6	1	Nipple, 1/2" Close Brass	04730-207-15-00
7	1	Gasket, Rinse Manifold	05330-003-75-91
8	1	Pressure Transducer	05945-004-17-01
9	3	Plug, 1/8" NPT Brass	04730-209-07-37
10	1	Elbow, 90-Degree 1/4" x 1/4"	04730-003-77-83
11	1	Thermistor Probe	06685-004-34-58
12	1	Probe Fitting	05310-924-02-05
13	1	Red Hose, NB Inlet, 1/2"	05700-004-70-90
14	1	Elbow, 90-Degree 1/2"	04730-011-42-96
15 15a	1 2	Bracket, Plumbing Screw, 1/4-20 x 1/2" (Not Shown)	05700-004-67-50 05305-004-62-33
16	1	Nipple, 1/2" x 2" Brass	04730-207-19-00
17	1	Union, 1/2" x 1/2" Brass	04730-003-62-44
18	3	Nipple, 1/2" Close Brass	04730-207-15-00
19	1	Solenoid Valve, 1/2"	04810-003-71-56
20	1	Flow Limiter, 1/2"	04730-004-67-76
21	1	Y-Strainer, 1/2"	04730-217-01-10
22	1	Coupling, 1/2"	05700-004-47-97
23*	1	Harness Cable, Braided (Not Shown)	05700-004-33-62 05700-004-33-59

NOTICE

When servicing plumbing components, take care not to damage the threads of each individual item. Damaged threads can cause leaks and loss of pressure, which could adversely affect the performance of the DynaStar machine. It is strongly recommended that teflon thread tape—used in conservative amounts—be applied to threads when joining components together. It is not advised to use thread sealing compounds, sometimes referred to as "pipe dope." Compounds can be ejected from the threads during the tightening process and become lodged in key components, rendering them useless, including solenoid valves and pressure gauge isolation ball valves.

**Part must be ordered separately.*

HH-E NB PLUMBING

Complete Plumbing Assembly
05700-005-02-38

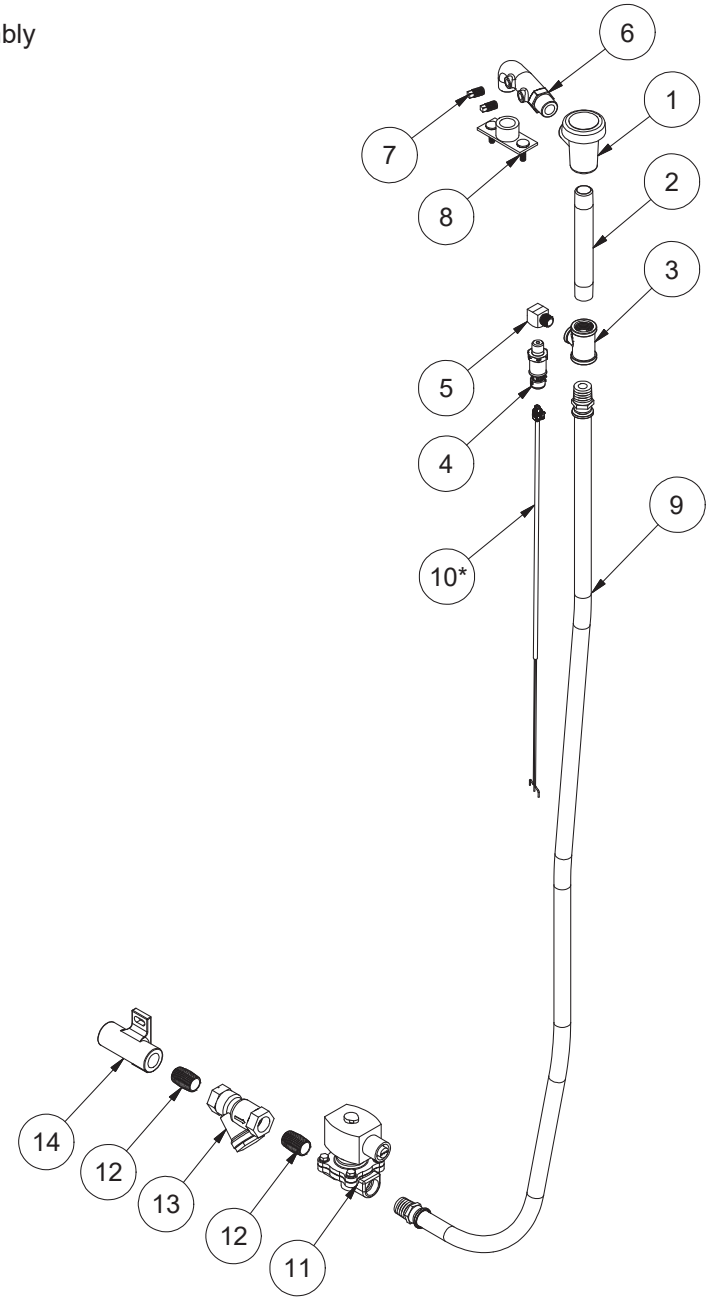

To order complete assemblies:

Inlet
Plumbing
05700-005-02-29

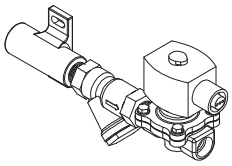

Rinse Manifold
Plumbing
05700-004-84-19

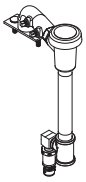

HH-E NB PLUMBING

ITEM	QTY	DESCRIPTION	PART NUMBER
1	1	Vacuum Breaker, 1/2" Brass	04820-003-06-13
2	1	Nipple, 1/2" x 6" Brass	04730-003-62-38
3	1	Tee	04730-002-22-56
4	1	Pressure Transducer	05945-004-17-01
5	1	Elbow, 90-Degree 1/4" x 1/4"	04730-003-77-83
6	1	Rinse Injector	09515-004-94-21
7	2	Plug, 1/8" NPT Brass	04730-209-07-37
8	1	Injector Plate	05700-002-04-71
9	1	Hose, Inlet Water, 1/2"	05700-005-02-39
10*	1	Harness Cable, Braided (Not Shown)	05700-004-68-24
11	1	Solenoid Valve, 1/2"	04810-003-71-56
12	2	Nipple, 1/2" Close Brass	04730-207-15-00
13	1	Y-strainer, 1/2"	04730-217-01-10
14	1	Coupling, 1/2"	05700-004-47-97

NOTICE

When servicing plumbing components, take care not to damage the threads of each individual item. Damaged threads can cause leaks and loss of pressure, which could adversely affect the performance of the DynaStar machine. It is strongly recommended that teflon thread tape—used in conservative amounts—be applied to threads when joining components together. It is not advised to use thread sealing compounds, sometimes referred to as "pipe dope." Compounds can be ejected from the threads during the tightening process and become lodged in key components, rendering them useless, including solenoid valves and pressure gauge isolation ball valves.

**Part must be ordered separately.*

DYNASTAR VER PLUMBING

Complete Plumbing Assembly
05700-005-11-97

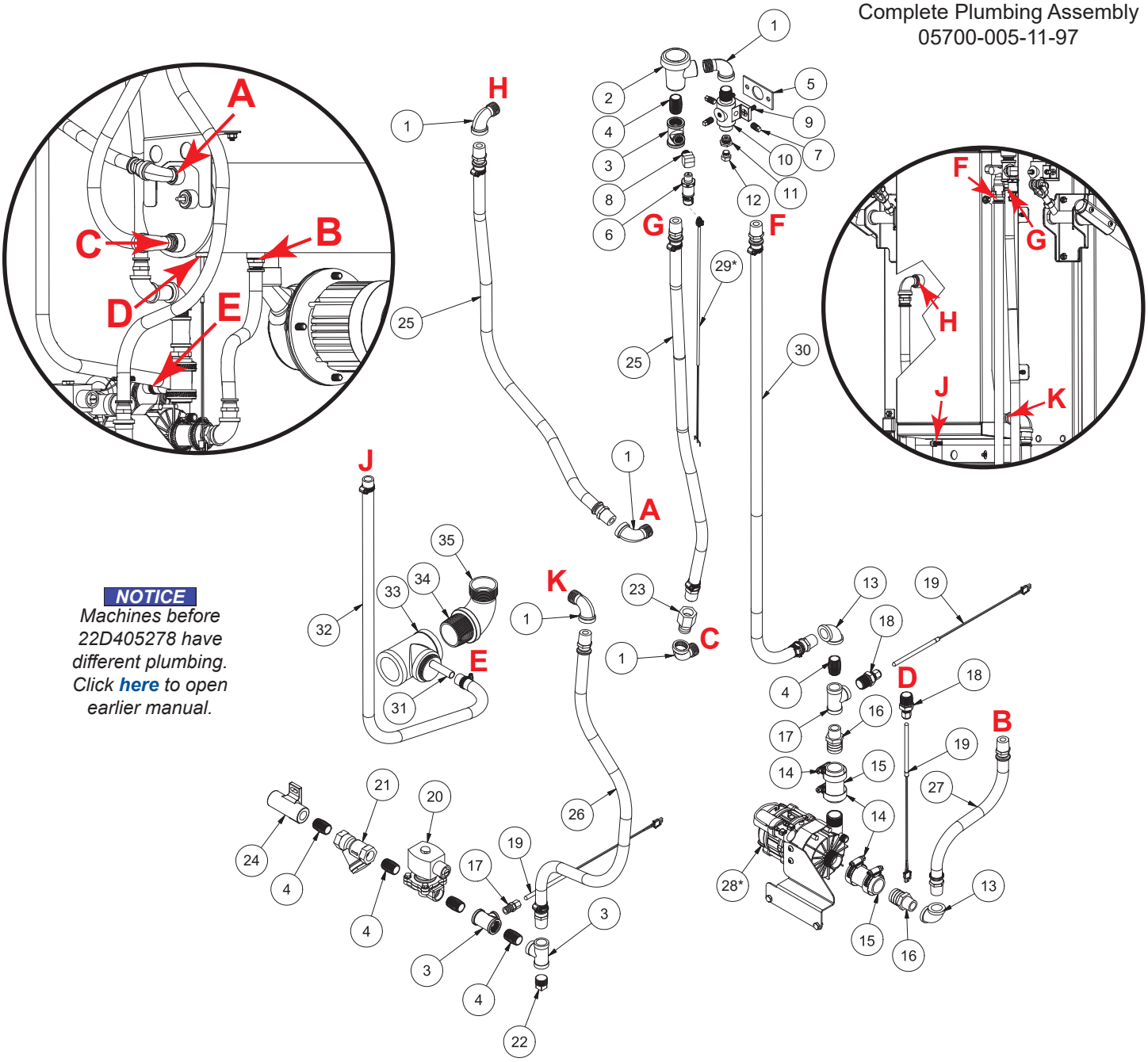

NOTICE
*Machines before 22D405278 have different plumbing. Click **here** to open earlier manual.*

To order complete assemblies:

Inlet Plumbing	Vacuum Breaker Plumbing	Rinse Pump Outlet Plumbing
05700-004-99-81	05700-004-65-63	05700-004-66-83

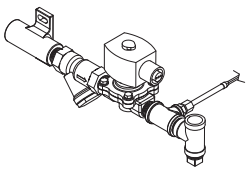

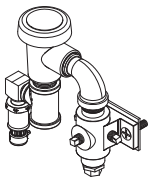

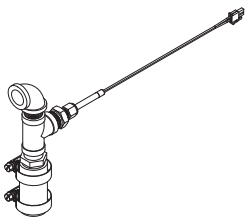

**Part must be ordered separately.*

DYNASTAR VER PLUMBING

ITEM	QTY	DESCRIPTION	PART NUMBER
1	5	Elbow, 90-Degree 1/2" Street Brass	04730-206-08-00
2	1	Vacuum Breaker, 1/2" Brass	04820-003-06-13
3	2	Tee	04730-002-22-56
4	5	Nipple, 1/2" Close Brass	04730-207-15-00
5	2	Gasket, Rinse Manifold	05330-003-75-91
6	1	Pressure Transducer	05945-004-17-01
7	3	Plug, 1/8" NPT Brass	04730-209-07-37
8	1	Elbow, 90-degree 1/4" x 1/4"	86075017
9	2	Screw, 1/4-20 x 1"	05305-011-81-58
10	1	Injector, Rinse Manifold	09515-004-22-73
11	1	Adapter	05700-002-29-75
12	1	Fitting, Thermostat Brass	05700-011-73-73
13	2	Elbow, 90-degree 1/2" Brass	04730-011-42-96
14	4	Clamp, Hose, 3/4" x 1 1/2"	04730-004-66-22
15	2	Hose, Black, 1" ID, 1 1/2" Long	05700-004-68-24
16	2	Fitting, 1" x 1/2" Brass	04730-004-68-25
17	1	Union, 1/4" Modified	05700-001-16-52
18	2	Probe Fitting	04730-004-71-72
19	2	Fast-acting Probe	06685-004-75-99
20	1	Solenoid Valve, 1/2"	04810-003-71-56
21	1	Y-strainer, 1/2"	04730-217-01-10
22	1	Union, 1/2" x 1/2" Brass	04730-003-62-44
23	1	Flow Limiter, 1/2"	04730-004-67-76
24	1	Casting, 1/2" Flanged Coupling	05700-004-47-97
25	2	Hose, 1/2" Red	05700-005-03-71
26	1	Hose, 1/2" Blue	05700-005-01-97
27	1	Hose, 1/2" Red	05700-005-03-77
28*	1	Rinse Pump with Bracket Rinse Pump Only	05700-004-67-91 06105-004-62-68
29*	1	Harness Cable, Braided (Not Shown)	05700-004-33-62 05700-004-33-59
30	1	Hose, 1/2" Red	05700-004-73-79
31	1	Fitting, Drain Coupling	05700-004-41-00
32	1	Hose, 1/2" Red	05700-004-74-45
33	1	Tee, 1/2" Brass	04730-011-69-93
34	1	Nipple, 1/2" Brass	04730-207-40-00
35	1	Elbow, 90-degree, 1 1/2" Brass	04730-206-32-00

NOTICE

*Machines before 22D405278 have different plumbing. Click **here** to open earlier manual.*

HH-E VER PLUMBING

Complete Plumbing Assembly
05700-005-02-01

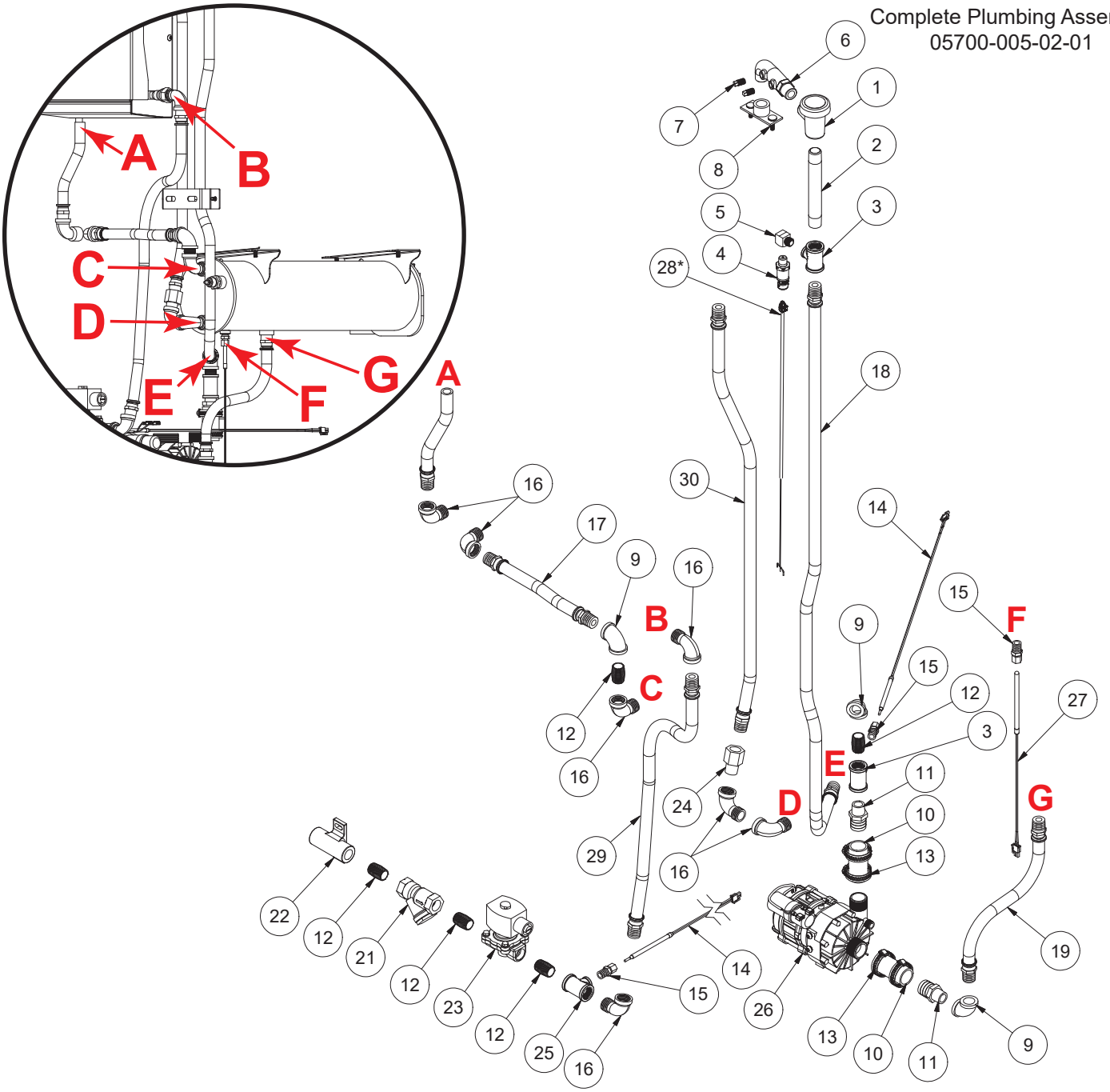

To order complete assemblies:

Inlet Plumbing 05700-004-99-81	Tank Fill Plumbing 05700-005-00-13	Rinse Manifold Plumbing 05700-004-84-19	Rinse Pump Outlet Plumbing 05700-004-66-83	Rinse Pump Plumbing 05700-004-67-86
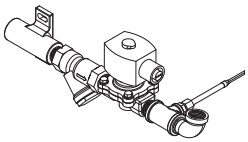	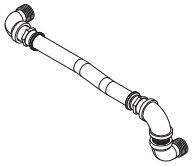	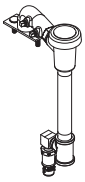	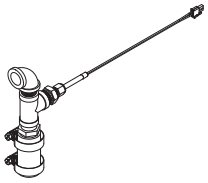	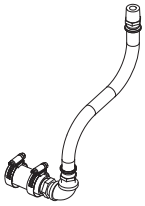

**Part must be ordered separately.*

07610-004-66-53-G

HH-E VER PLUMBING

ITEM	QTY	DESCRIPTION	PART NUMBER
1	1	Vacuum Breaker, 1/2" Brass	04820-003-06-13
2	1	Nipple, 1/2" x 6" Brass	04730-003-62-38
3	2	Tee	04730-002-22-56
4	1	Pressure Transducer	05945-004-17-01
5	1	Elbow, 90-Degree 1/4" x 1/4"	04730-003-77-83
6	1	Rinse Injector	09515-004-94-21
7	2	Plug, 1/8" NPT Brass	04730-209-07-37
8	1	Injector Plate	05700-002-04-71
9	3	Elbow, 90-Degree 1/2" Brass	04730-011-42-96
10	2	Hose, Black, 1" ID, 1 1/2" Long	05700-004-68-24
11	2	Fitting, 1" x 1/2" Brass	04730-004-68-25
12	4	Nipple, 1/2" Close Brass	04730-207-15-00
13	4	Clamp, 13/16" x 1 1/2"	04730-719-06-09
14	1	Fast-acting Probe	06685-004-75-99
15	1	Union, 1/4" Modified	05700-001-16-52
16	3	Elbow, 90-Degree 1/2" Street Brass	04730-206-08-00
17	1	Hose, 1/2" x 5"	05700-005-00-14
18	1	Hose, 1/2" x 48 1/2"	05700-005-00-27
19	1	Hose, 1/2" x 10"	05700-004-67-84
20	1	Hose, Coil Drain 1/2"	05700-005-01-99
21	1	Y-strainer, 1/2"	04730-217-01-10
22	1	Coupling, 1/2"	05700-004-47-97
23	1	Solenoid Valve, 1/2"	04810-003-71-56
24	1	Flow Limiter, 1/2"	04730-004-67-76
25	1	Tee, 1/2" x 1/2" x 1/4"	05700-005-02-30
26*	1	Rinse Pump	05700-004-67-91
27	1	Thermistor Probe	06685-004-34-58
28*	1	Harness Cable, Braided (Not Shown)	05700-004-33-62 05700-004-33-59
29	1	Hose, 1/2" x 24"	05700-005-01-97
30	1	Hose, 1/2" x 30 1/2"	05700-005-01-98

VER SYSTEM

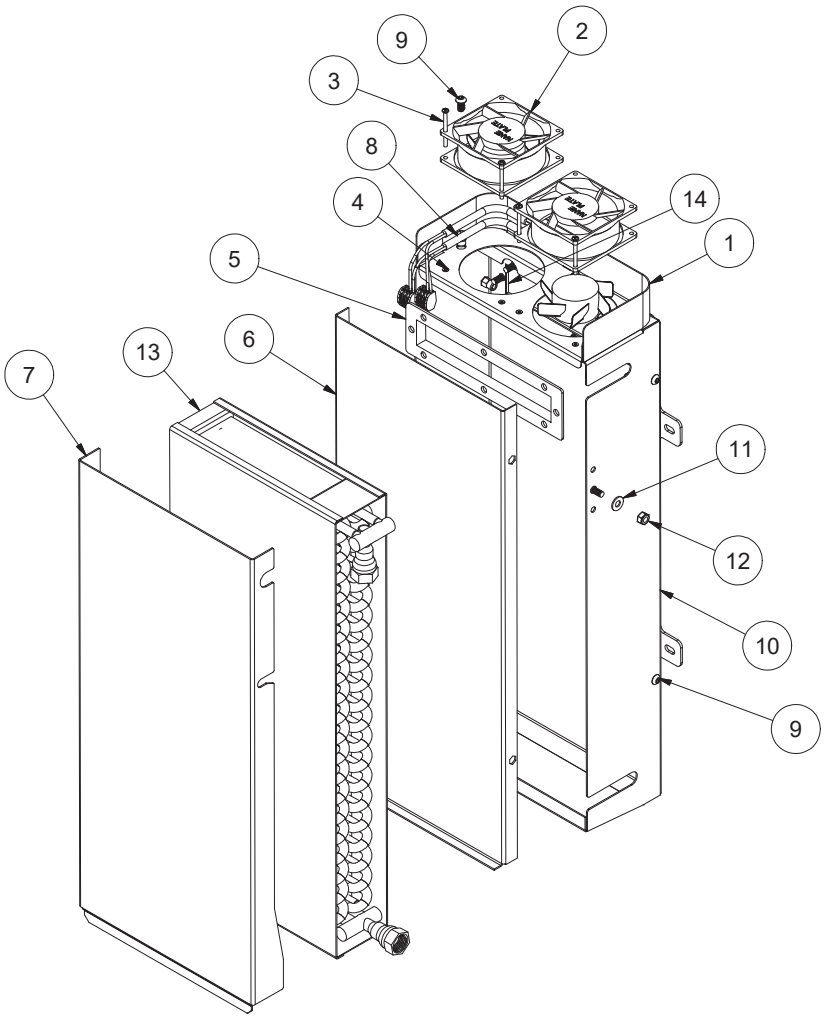

ITEM	QTY	DESCRIPTION	PART NUMBER
1	1	Wrap, Coil Box Fans	05700-004-73-94
2	2	Fan, 24 V DC	05999-004-73-32
3	4	Screw, 6-32 x 1 3/4"	05305-004-19-80
4	4	Nut, 6-32 Plated	05340-118-04-00
5	1	Air Transfer Seal	05700-004-40-24
6	1	Plate, Air-gap	05700-004-70-32
7	1	Cover, Coil	05700-004-70-33
8	6	Insert, Threaded Hex 1/4-20	05310-004-23-96
9	6	Screw, 1/4-20 x 1/2" Hex	05305-004-62-33
10	1	Wrap, Coil	05700-004-73-67
11	2	Washer, 1/4-20	05311-174-01-00
12	2	Locknut, 1/4-20 Hex with Nylon Insert	05310-374-01-00
13	1	Coil, VER	04420-004-70-38
14	1	Gasket, Air Transfer Seal	05330-004-83-38

Complete Interlock Assembly
05700-004-82-84

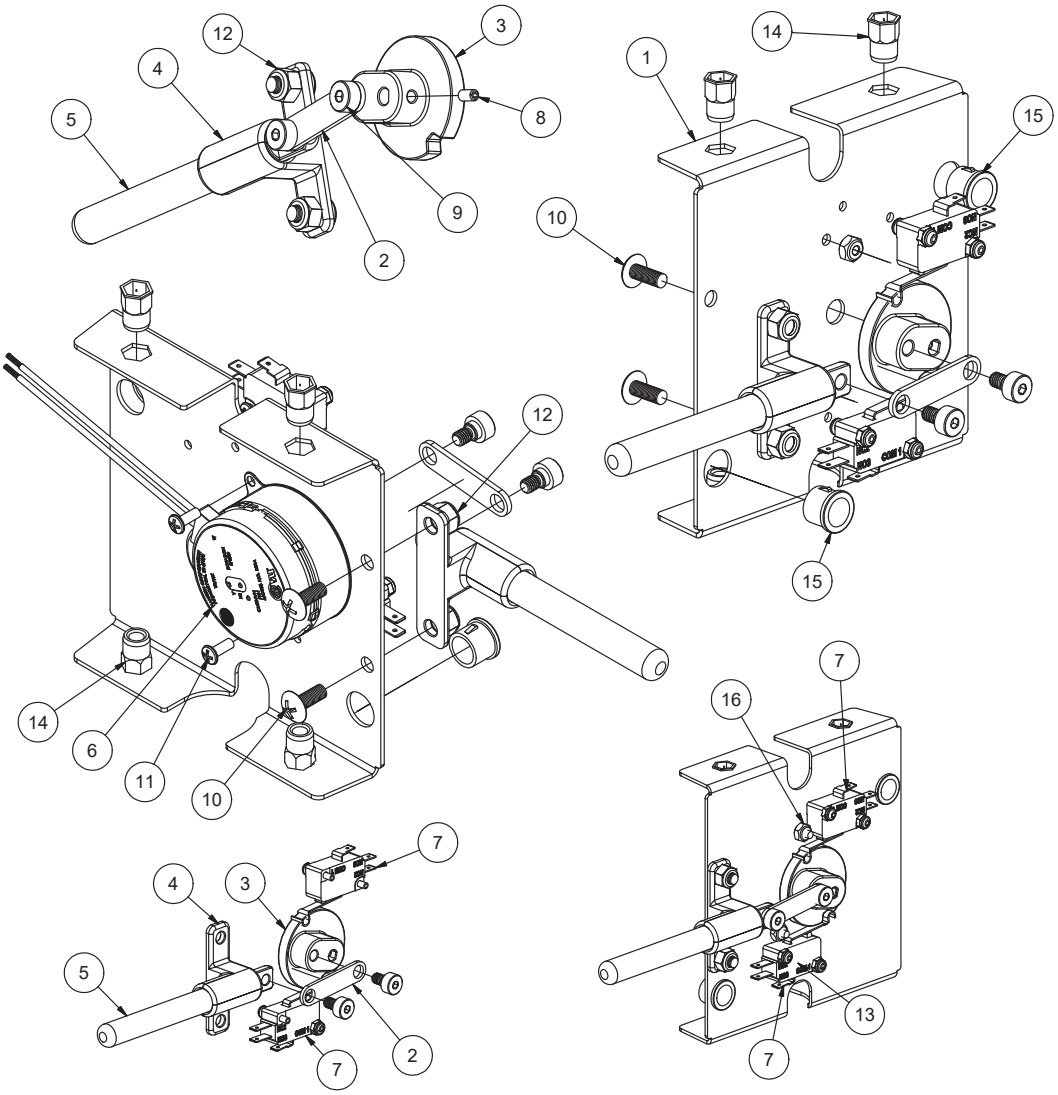

Complete Interlock Box Assembly
05700-004-82-83

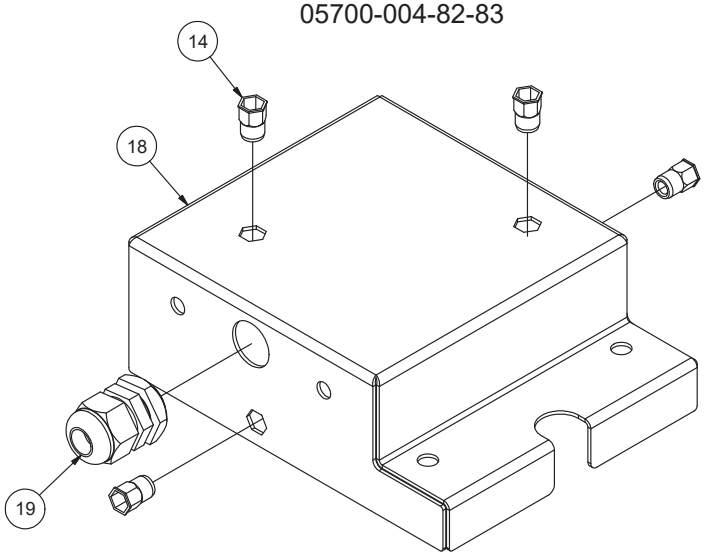

DOOR INTERLOCK

ITEM	QTY	DESCRIPTION	PART NUMBER
1	1	Plate, Interlock	05700-004-82-79
2	1	Link, Interlock Connector	05700-004-71-37
3	1	Interlock Cam	05700-004-71-39
4	1	Interlock Guide	05700-004-71-50
5	1	Pin, Interlock	05700-004-71-49
6	1	Motor, Interlock	06105-004-70-04
7	2	Switch, Interlock	05930-004-71-36
8	1	Set Screw, 6-32 x 1/4"	05305-004-71-42
9	2	Shoulder Screw, 10-32	05305-004-71-40
10	2	Screw, 10-32 x 1/2"	05305-011-39-36
11	2	Screw, 6-32 x 3/8"	05305-171-02-00
12	2	Locknut, 10-32 with Nylon Insert	05310-373-02-00
13	5	Locknut, 4-40	05310-279-06-00
14	8	Insert, Threaded Hex 1/4-20	05310-004-23-96
15	2	Bushing, Lock	05975-210-05-00
16	2	Locknut, 6-32 with Nylon Insert	05310-373-03-00
17	1	Harness, Door Interlock (Not Shown)	05700-004-92-05
18	1	Box, Door Interlock	05700-004-82-85
19	1	Fitting	05975-011-49-03

WATER HAMMER ARRESTOR OPTION

Water Hammer Arrestor, 1/2”
04730-004-58-56

PRESSURE REGULATING VALVE OPTION

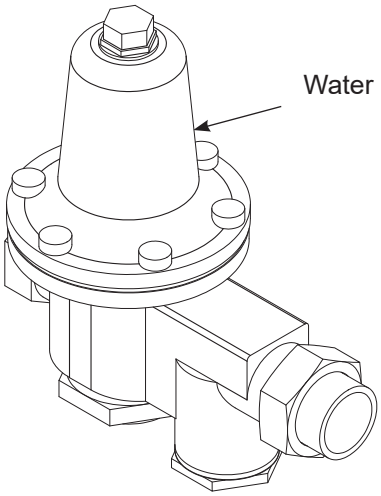

Water Pressure Regulator, 1/2”
04820-100-04-07

WATER TREATMENT OPTION

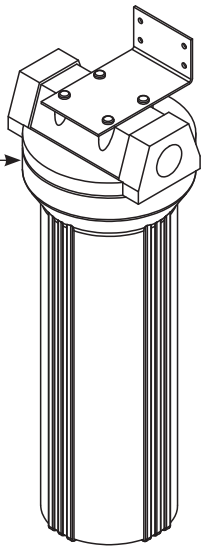

Scaltrol System
04730-003-05-76

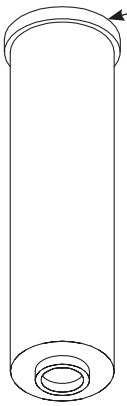

Replacement Cartridge
(inspect at least every 6 months)
RSC-100

NOTICE

Must be installed vertically. The provided bracket is secured to the wall. Observe proper inlet/outlet water directions (flow directions are molded into the top of the head). Release line pressure before changing cartridges. Delime machine before installation.

DYNASTAR & HH-E SCHEMATIC
STD/VER/NB

LEGEND

L1,L2,L3	POWER DISTRIBUTION BLOCK
GND	EARTH GROUND
H1	HEATER, RINSE
H2	HEATER, WASH
M1	MOTOR, WASH PUMP
M2	MOTOR, DOOR INTERLOCK(OPTION)
R1	CONTACTOR, RINSE HEATER
R2	CONTACTOR, WASH HEATER
R3	CONTACTOR, WASH PUMP
R4	RELAY, CONTROL
F1	FUSE- L1 CONTROL
F2	FUSE- EXHAUST FAN CONN.
F3	FUSE- DETERGENT DISPENSER
F4	FUSE- RINSE DISPENSER
F5	FUSE- CONSTANT VOLTAGE CONN.
S1	SWITCH, DOOR
S2	SWITCH, DOOR LOCK OPEN (OPTION)
S3	SWITCH, DOOR LOCK CLOSE (OPTION)
HLTS	HIGH-LIMIT T-STAT, WASH HEATER
HLRS	HIGH-LIMIT T-STAT, RINSE HEATER
FS	RINSE/FILL SOLENOID
TS1	L1 TERMINAL STRIP
TS2	L2 TERMINAL STRIP
PT	PRESSURE TRANSDUCER
PS	POWER SUPPLY 24VDC
PS1	PRESSURE SWITCH
LLC	LIQUID LEVEL CONTROL (BOOSTER)

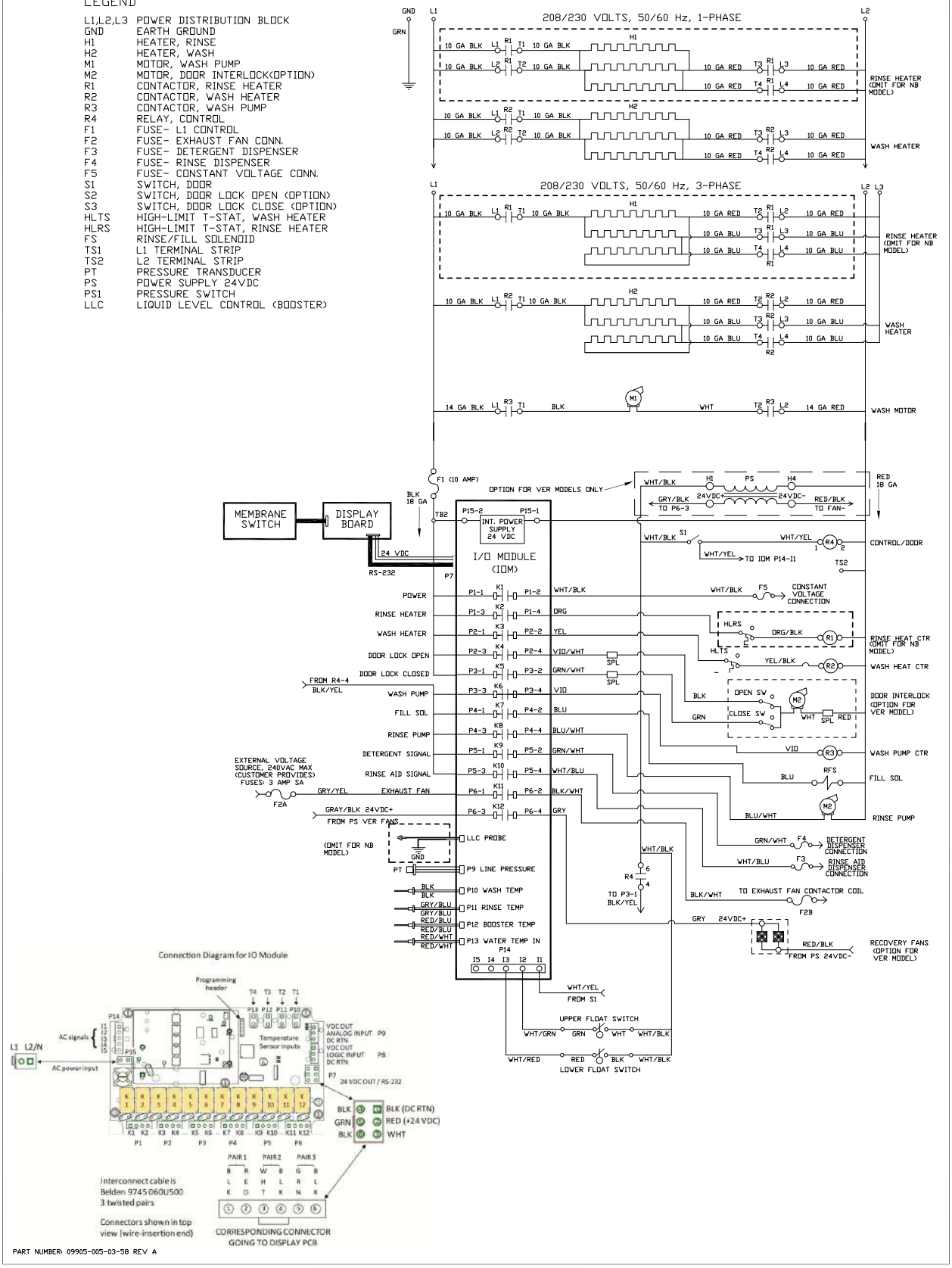

DYNASTAR & HH-E SCHEMATIC
STD/VER/NB

LEGEND

L1,L2,L3	POWER DISTRIBUTION BLOCK
GND	EARTH GROUND
H1	HEATER, RINSE
H2	HEATER, WASH
M1	MOTOR, WASH PUMP
M2	MOTOR, DOOR INTERLOCK(OPTION)
R1	CONTACTOR, RINSE HEATER
R2	CONTACTOR, WASH HEATER
R3	CONTACTOR, WASH PUMP
R4	RELAY, CONTROL
F1	FUSE- L1 CONTROL
F2	FUSE- EXHAUST FAN CONN.
F3	FUSE- DETERGENT DISPENSER
F4	FUSE- RINSE DISPENSER
F5	FUSE- CONSTANT VOLTAGE CONN.
S1	SWITCH, DOOR
S2	SWITCH, DOOR LOCK OPEN (OPTION)
S3	SWITCH, DOOR LOCK CLOSE (OPTION)
HLTS	HIGH-LIMIT T-STAT, WASH HEATER
HLRS	HIGH-LIMIT T-STAT, RINSE HEATER
FS	RINSE/FILL SOLENOID
TS1	L1 TERMINAL STRIP
TS2	L2 TERMINAL STRIP
PT	PRESSURE TRANSDUCER
PS	POWER SUPPLY 24VDC
PS1	PRESSURE SWITCH
MOL	OVERLOAD WASH MOTOR
T1	TRANSFORMER
LLC	LIQUID LEVEL CONTROL (BOOSTER)

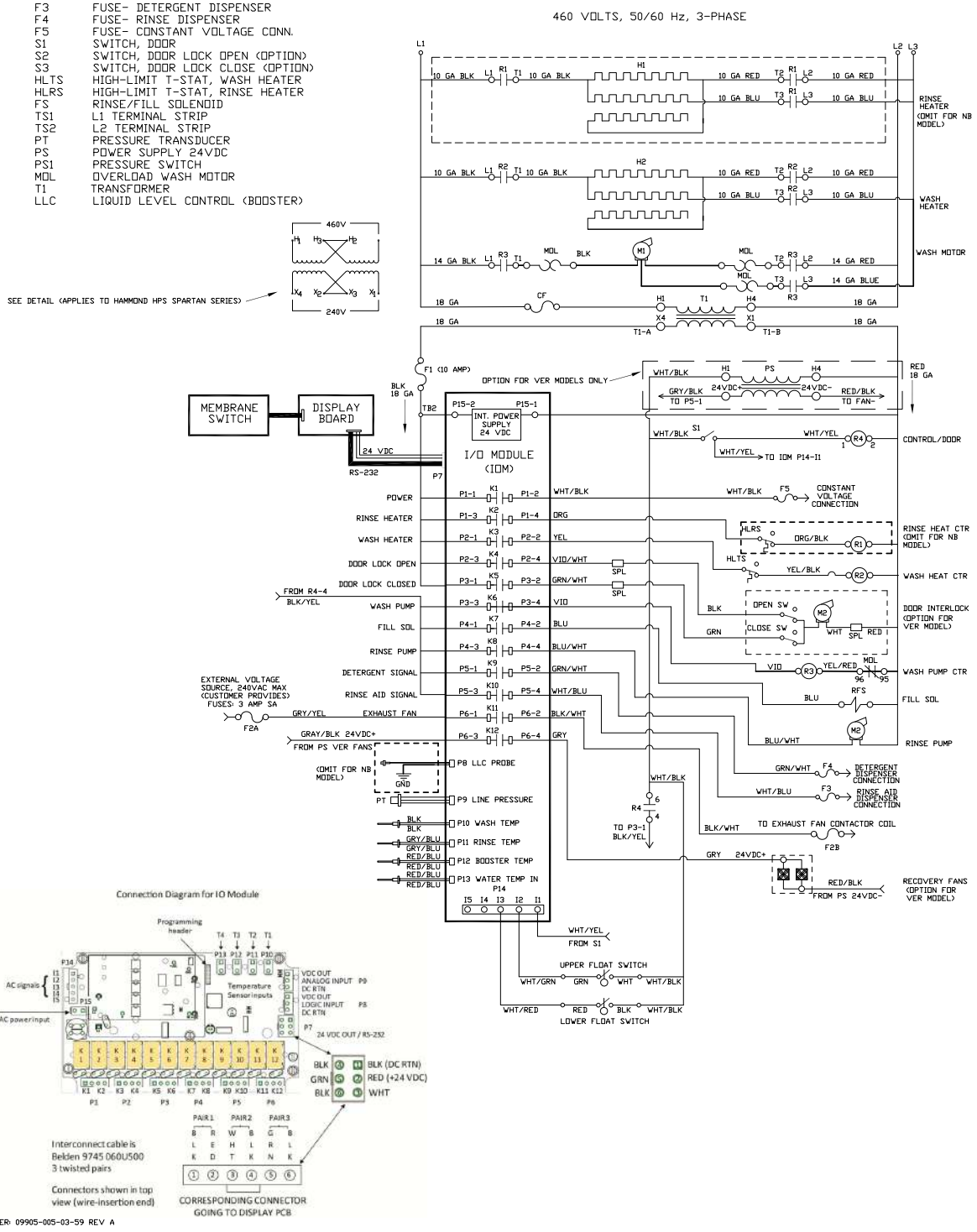

DISPLAY GUIDE

This page can be printed and the display guides cut-out.
Lay the cut-out over the display and use the red-dotted lines to locate the hidden buttons.

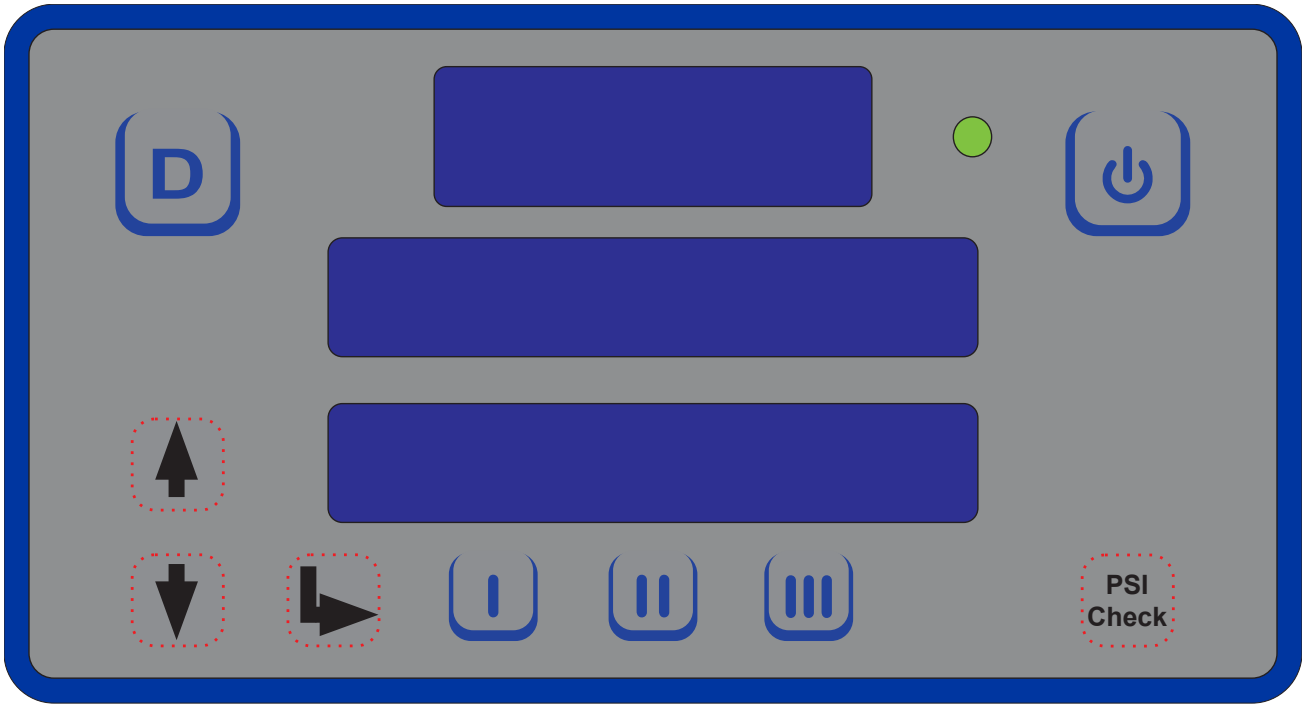

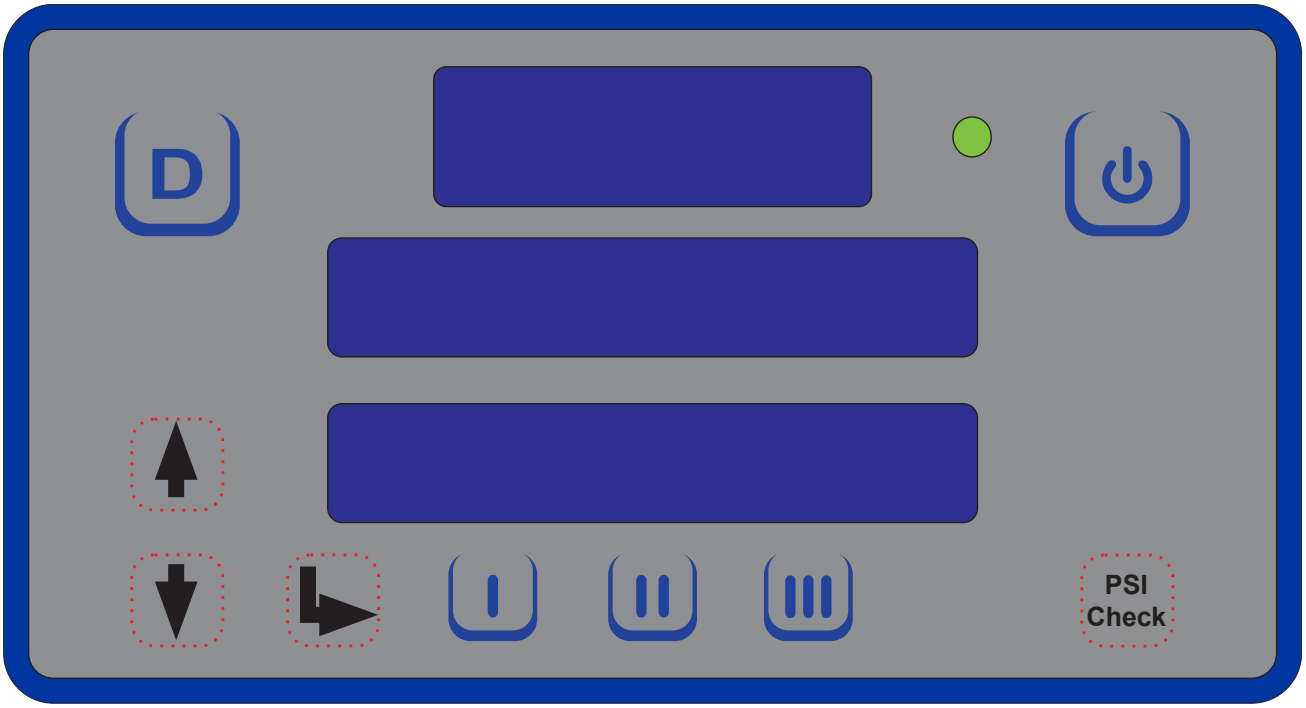

Jackson WWS, Inc. • 6209 N. US Hwy 25E • Gray, KY 40734 USA
1.888.800.5672 • www.jacksonwws.com